Data Sheet and Service Manual

EM450 – CLASSIC

Date: 03.07.2025



1 Table of Contents

2 TECHNICAL DATA....3
3 HYDRAULIC DIAGRAM....4
4 WIRING DIAGRAM....5
4.1 INTERNATIONAL AND CHINA VERSIONS....5
4.2 UNITED STATES AND TAIWAN VERSIONS....6
5 STATISTICS READING....7
6 LIGHTS FLASHING EXPLANATION....8

2 TECHNICAL DATA

Voltage – Frequency – Input Power	220-240V ÷ 50-60Hz ÷ 1325W (INT/CN versions) 120V ÷ 60Hz ÷ 1325W (US version) 120V ÷ 60Hz ÷ 1100W (TW version)
Power Consumption in Stand-By	0.3W (only INT version)

COMPONENTS

Pump	JYPC ASM 5B05 220-230V ÷ 15Bar (INT/CN versions) JYPC ASM 503-A 100-127V ÷ 15Bar (US/TW versions)
Thermoblock	
- Temperature probe	NTC sensor: ≈100kΩ at 25°C
- Thermal fuse TCO	216°C
- Heating element	230Vac ÷ 1300W (INT/CN versions) 120Vac ÷ 1300W (US/TW versions)

3 HYDRAULIC DIAGRAM

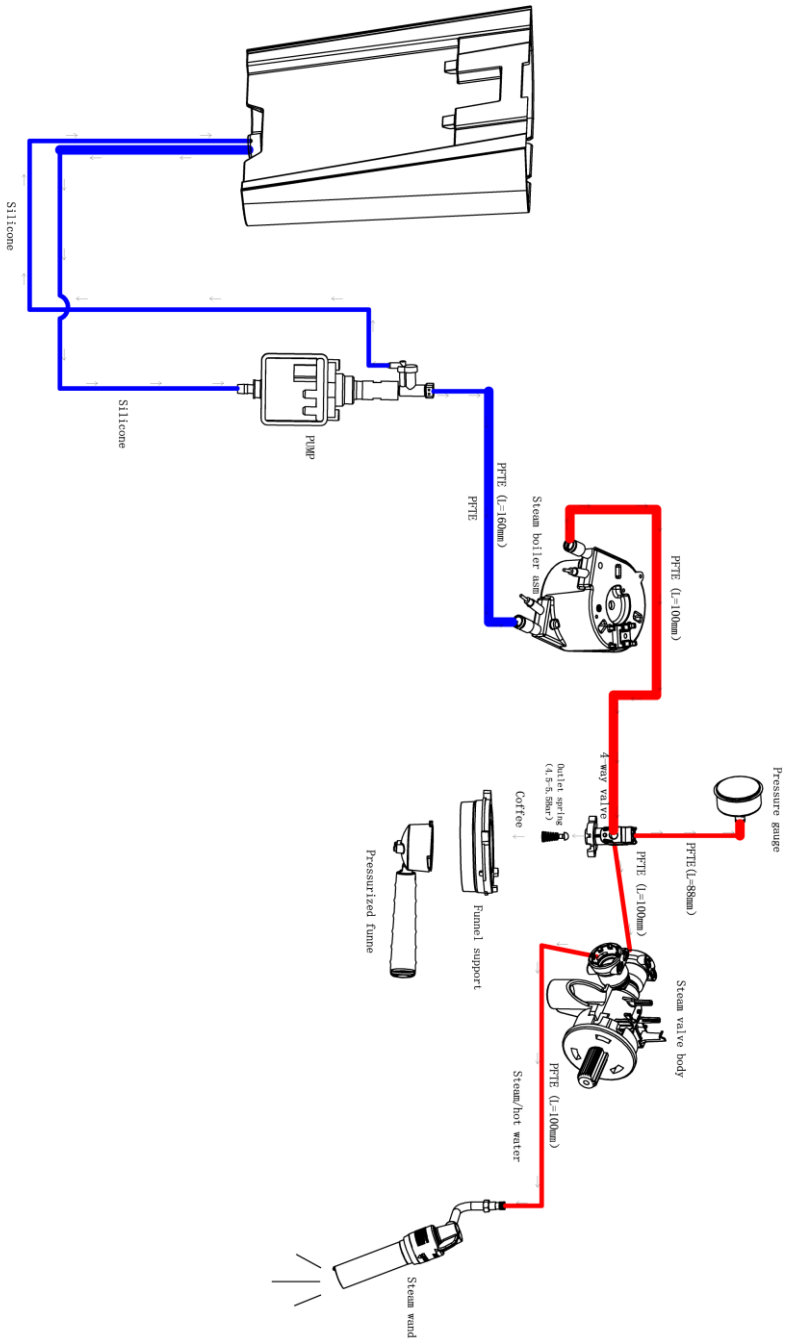

4 WIRING DIAGRAM

4.1 INTERNATIONAL AND CHINA VERSIONS

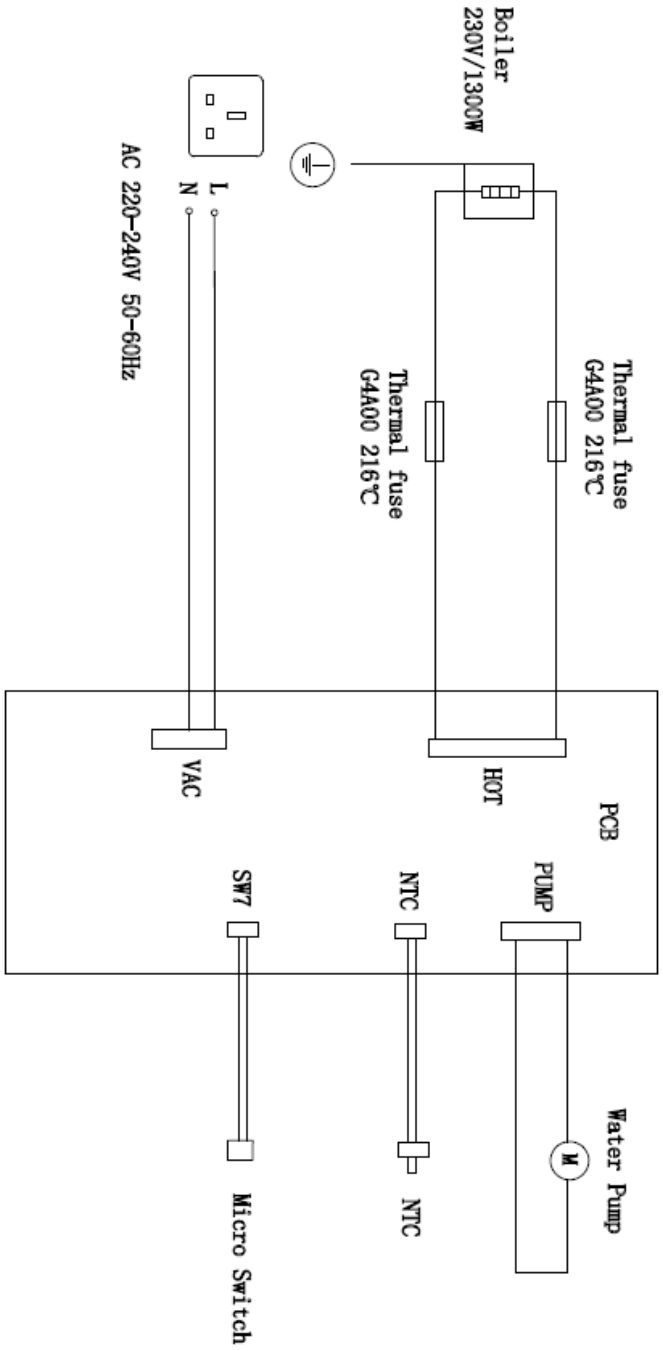

4.2 UNITED STATES AND TAIWAN VERSIONS

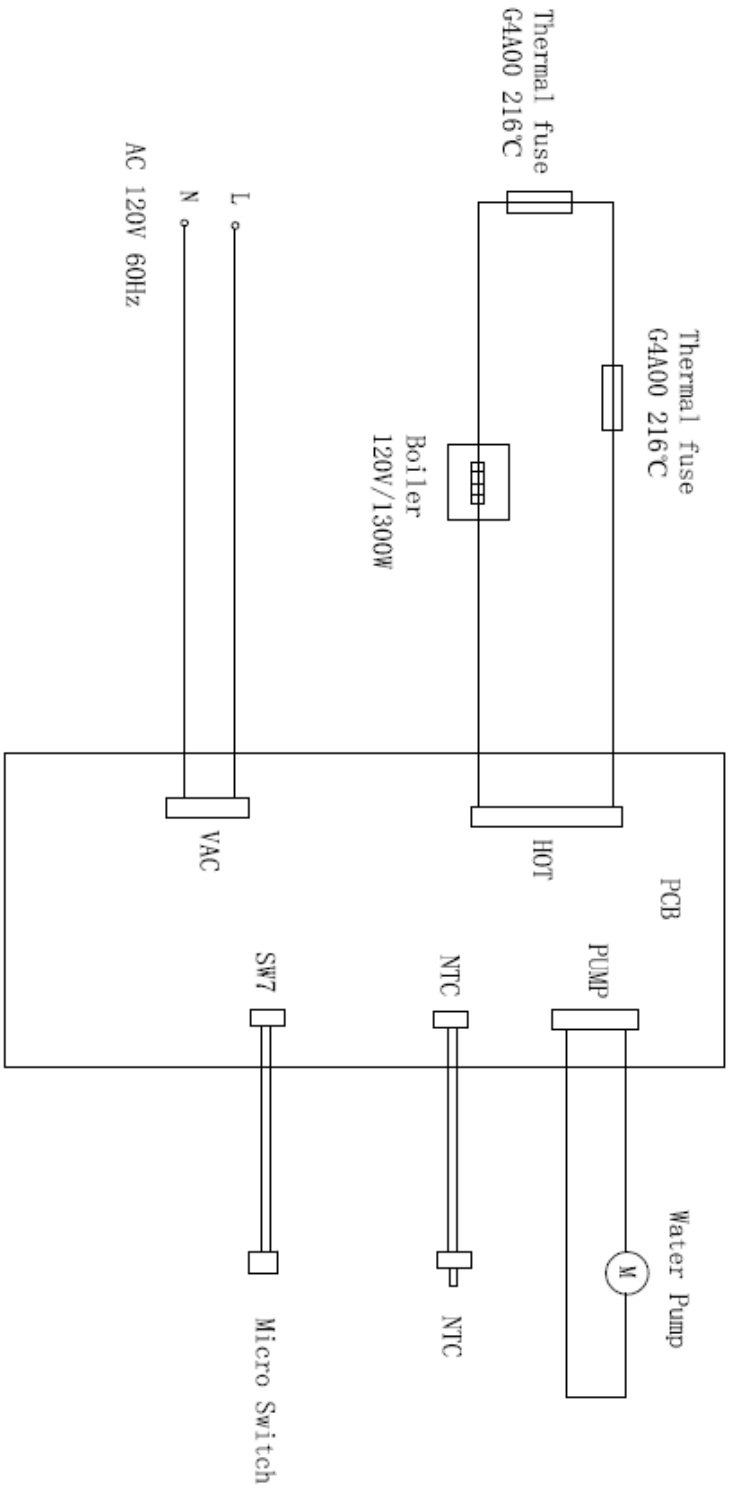

5 STATISTICS READING

The Service Engineer has the opportunity to access a dedicated statistic of the machine to determine how the machine has been used over time.

To access the statistics mode, proceed as follows:

1. Unplug the machine from the power socket.
2. Hold the 2 CUPS button pushed and, at the same time, plug the power cord. Hold the 2 CUPS button pushed until the power button LED will start flashing intermittently:

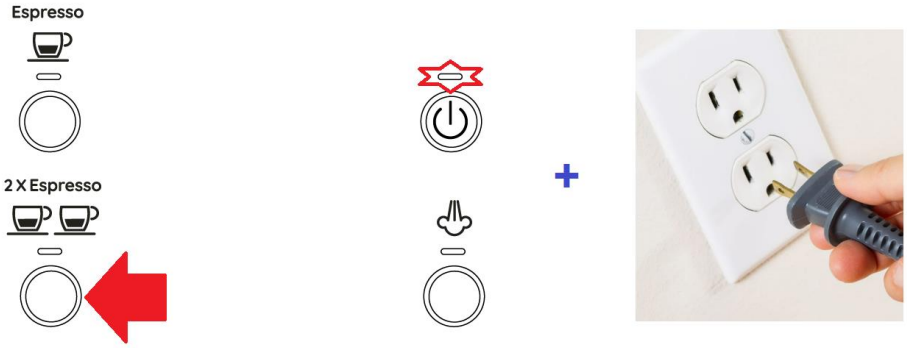

3. Press one of the below buttons to read the corresponding statistics:

Button	Statistics
	Total number of coffee beverages delivered
	Number of hot water deliveries
	Number of steam deliveries
	Number of descaling procedures done

Check the number of flashes of each icon to count the statistics:

- 1 CUP flashes: counts the tens.
- 2 CUPS flashes: counts the hundreds.
- STEAM flashes: counts the thousands.

6 LIGHTS FLASHING EXPLANATION

Lights	Meaning	Solution
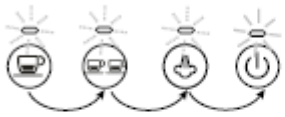	The appliance is plug into the mains socket	The appliance performs a self-diagnosis cycle, indicated by sequential flashing of the lights
	The ON/OFF (B1) button is turned on	Flashing lights: the appliance is heating up Lights on steadily: the appliance is ready
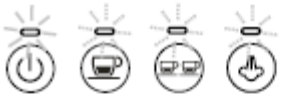	Steam dial open	Close the steam dial
	Cooling cycle required	See "5.3 Cooling cycle"
	The steam function is required	Flashing light: the appliance is heating up to deliver steam Light on steadily: the appliance is ready to deliver steam
	Steam orange light on, descaling process is necessary	Descale the appliance (see paragraph 10).