Data Sheet and Service Manual

ECAM320 - MAGNIFICA PLUS

Date: 25.11.2024



1 Summary

2 TECHNICAL DATA....3
3 HYDRAULIC DIAGRAM....4
4 WIRING DIAGRAM....5
4.1 PRACTICAL OUTLINE....5
4.2 THEORETICAL OUTLINE....6
5 WORKING PRINCIPLE....7
5.1 MICROSWITCHES, SENSORS AND SOLENOID VALVES....7
5.2 ESPRESSO COFFEE PREPARATION....8
5.3 HOT WATER PREPARATION....9
5.4 MILK FROTH PREPARATION....10
6 TEST MODE....11
6.1 EXPLANATION OF THE LOAD TEST MODE BUTTONS AND FUNCTIONS....13
6.2 PEN ALM....15
7 TROUBLESHOOTING....16
7.1 POSSIBLE TESTS WHICH CAN BE EXECUTED FROM THE LOAD TEST MODE....16
7.1.1 COFFEE CIRCUIT FLOW ACTIVATION....16
7.1.2 HOT WATER AND STEAM FLOW ACTIVATION....16
7.2 ELECTRIC CHECKS DIRECTLY ON THE COMPONENTS....16
7.2.1 HEATING ELEMENT RESSISTANCE CHECK....16
7.2.2 RESISTANCE/TEMPERATURE CHARACTERISTICS FOR THE NTC SENSOR....16
7.2.1 GROUND CHECK POINT FOR THE APPLIANCE....17
7.3 COFFEE TEMPERATURE TEST....18
7.4 FROTHED MILK CONSISTENCY AND TEMPERATURE TEST....19
8 DEMO MODE ACTIVATION....20

2 TECHNICAL DATA

GENERAL INFO	
Voltage – Frequency – Input Power	120V – 60Hz – 1450W
Stand-by Button OFF	≈ 0.25Wh
COMPONENTS	
Pump	120V AC – 52W – 15bar
Solenoid valve (EV1)	120V AC
Grinder motor	120V AC
Transmission motor	DC with position encoder
Thermoblock:	
Temperature probe	NTC sensor
Thermal fuse TCO	192°C
Heating element	120V AC – 1400W

3 HYDRAULIC DIAGRAM

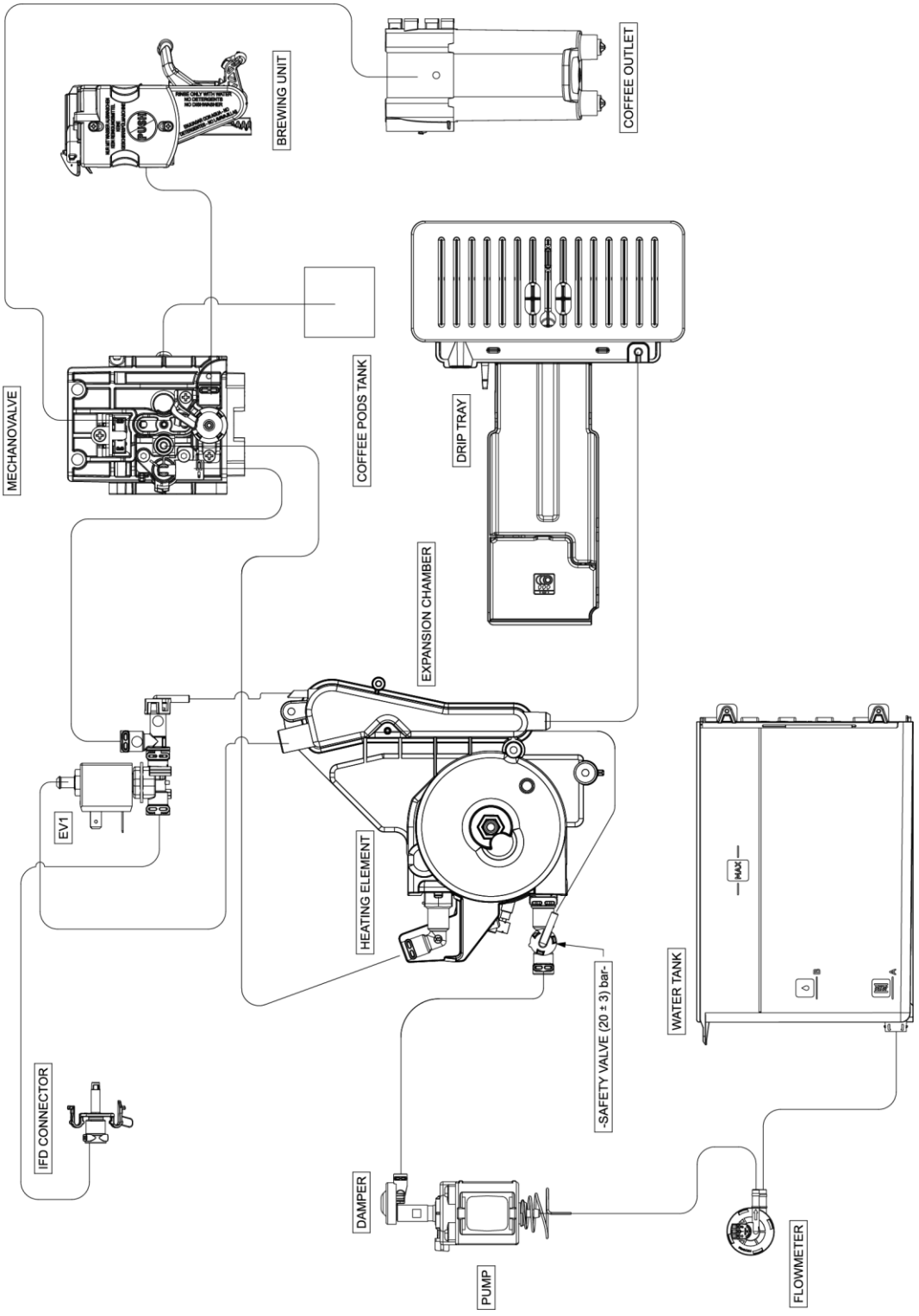

4 WIRING DIAGRAM

4.1 PRACTICAL OUTLINE

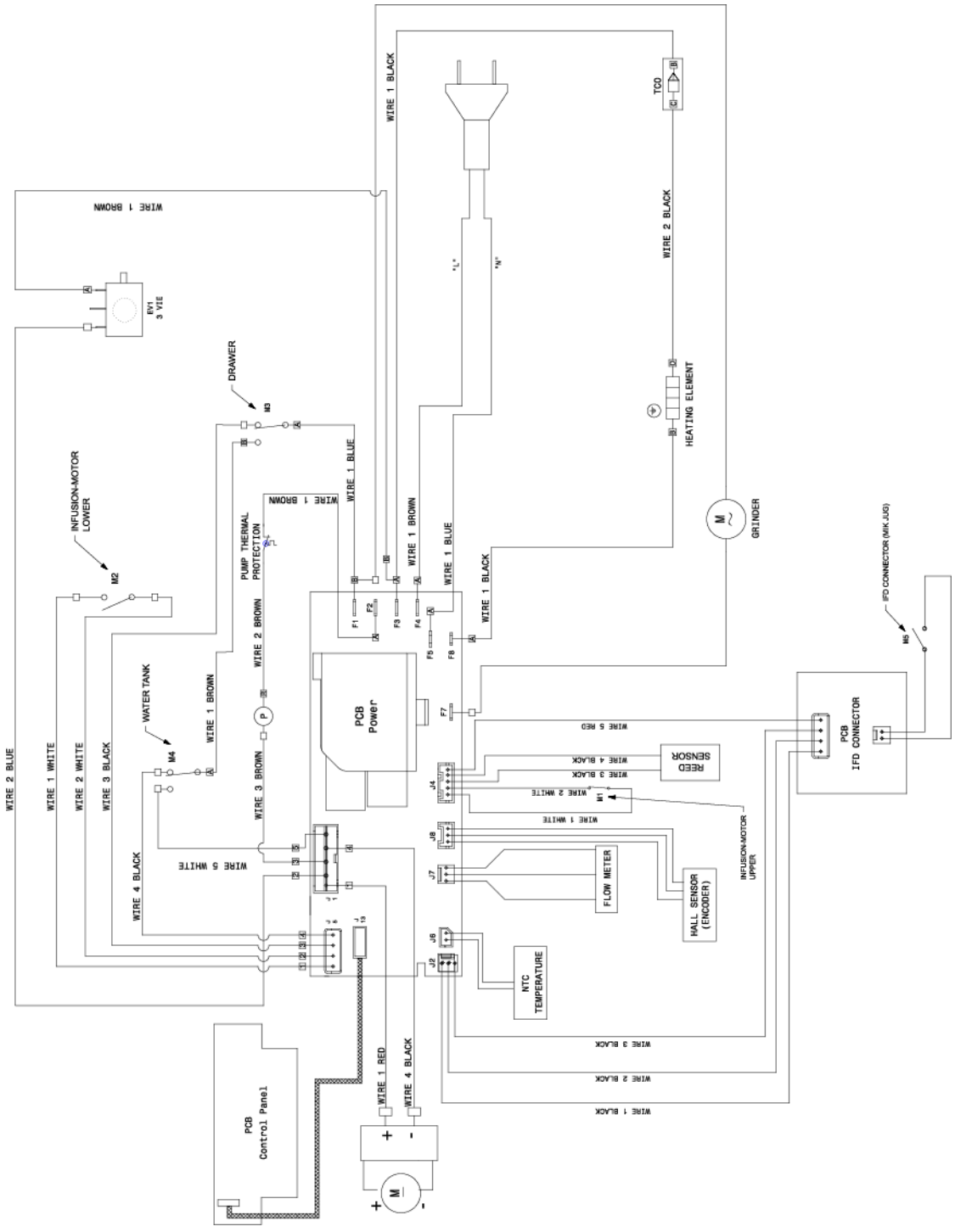

4.2 THEORETICAL OUTLINE

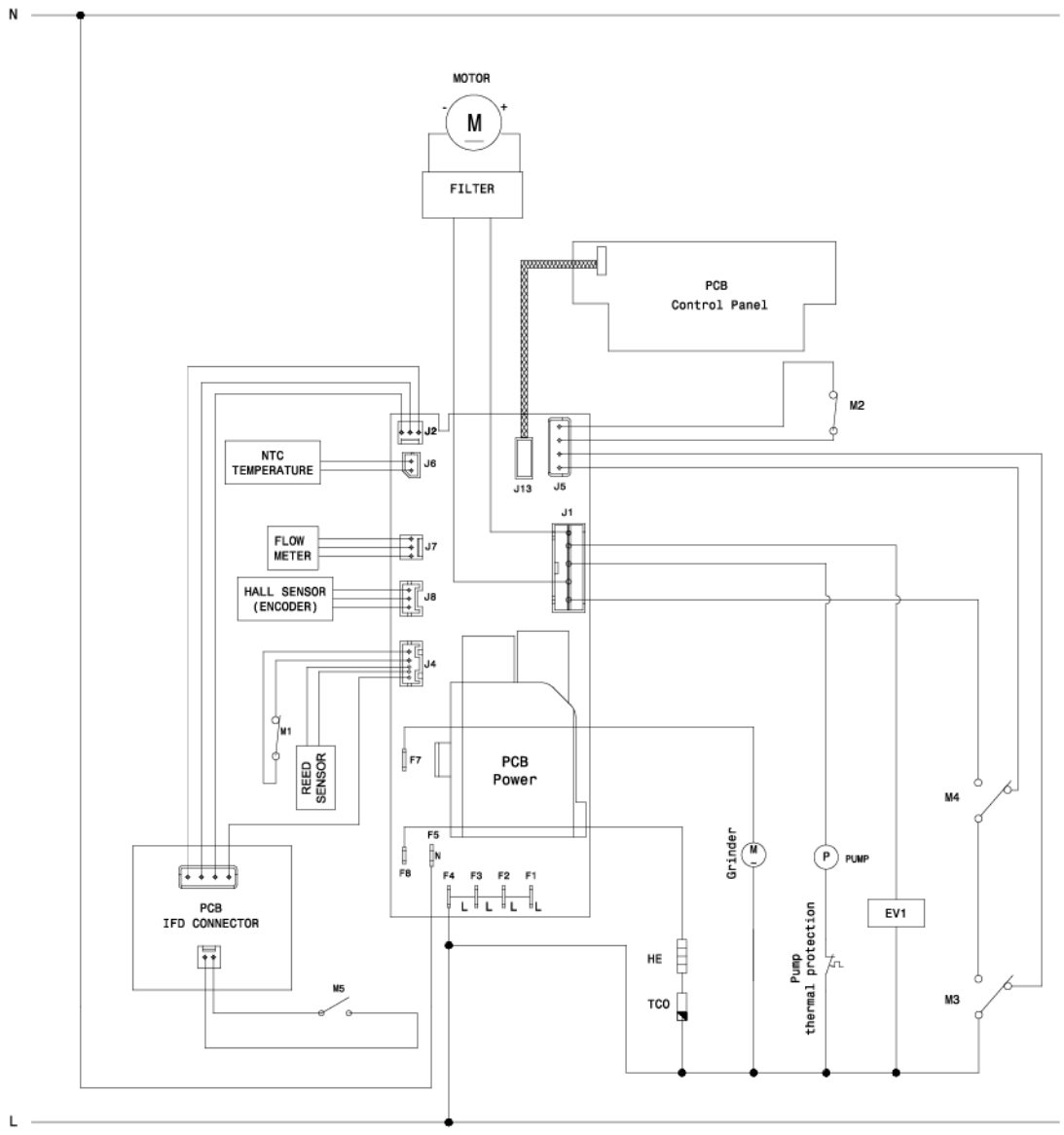

LEGEND:

L : PHASE/LINE
N : NEUTRAL
TCO : THERMAL CUT OFF/THERMAL LINK
HE : HEATING ELEMENT
M1 : MICROSWITCH UPPER (GROUP INFUSION-MOTOR)
M2 : MICROSWITCH LOWER (GROUP INFUSION-MOTOR)
M3 : MICROSWITCH DRAWER
M4 : MICROSWITCH WATER TANK
M5 : MICROSWITCH IFD CONNECTOR (MILK JUG)

5 WORKING PRINCIPLE

5.1 MICROSWITCHES, SENSORS AND SOLENOID VALVES

MICROSWITCHES	**Function**	**Logic**
M1 = UPPER MICROSWITCH	Detects when the infuser is on top position	“NC”, it opens when the infuser is in top position
M2 = LOWER MICROSWITCH	Detects when the infuser is on down position	“NO”, it closes when the infuser is in down position
M3 = DRAWER MICROSWITCH	Detects when the drip tray is in correct position	3-pin micro switch. When the drip tray is inserted: - the contact for the drip tray detection is OPEN; - the contact for the transmission motor power supply is CLOSED.
M4 = WATER TANK MICROSWITCH	Detects the presence of the water tank	3-pin micro switch. When the water tank is inserted: - the contact for the water tank detection is OPEN; - the contact for the transmission motor power supply is CLOSED.
M5 = IFD CONNECTOR MICROSWITCH	Detects when the IFD connector is attached to the machine	“NO”, it closes when the IFD connector is attached.
REED AND ENCODER	**Function**	**Logic**
REED SENSOR EMPTY WATER TANK	Detects when the water level is at minimum	
HALL SENSOR ENCODER	Detects rotations of transmission motor	

5.2 ESPRESSO COFFEE PREPARATION

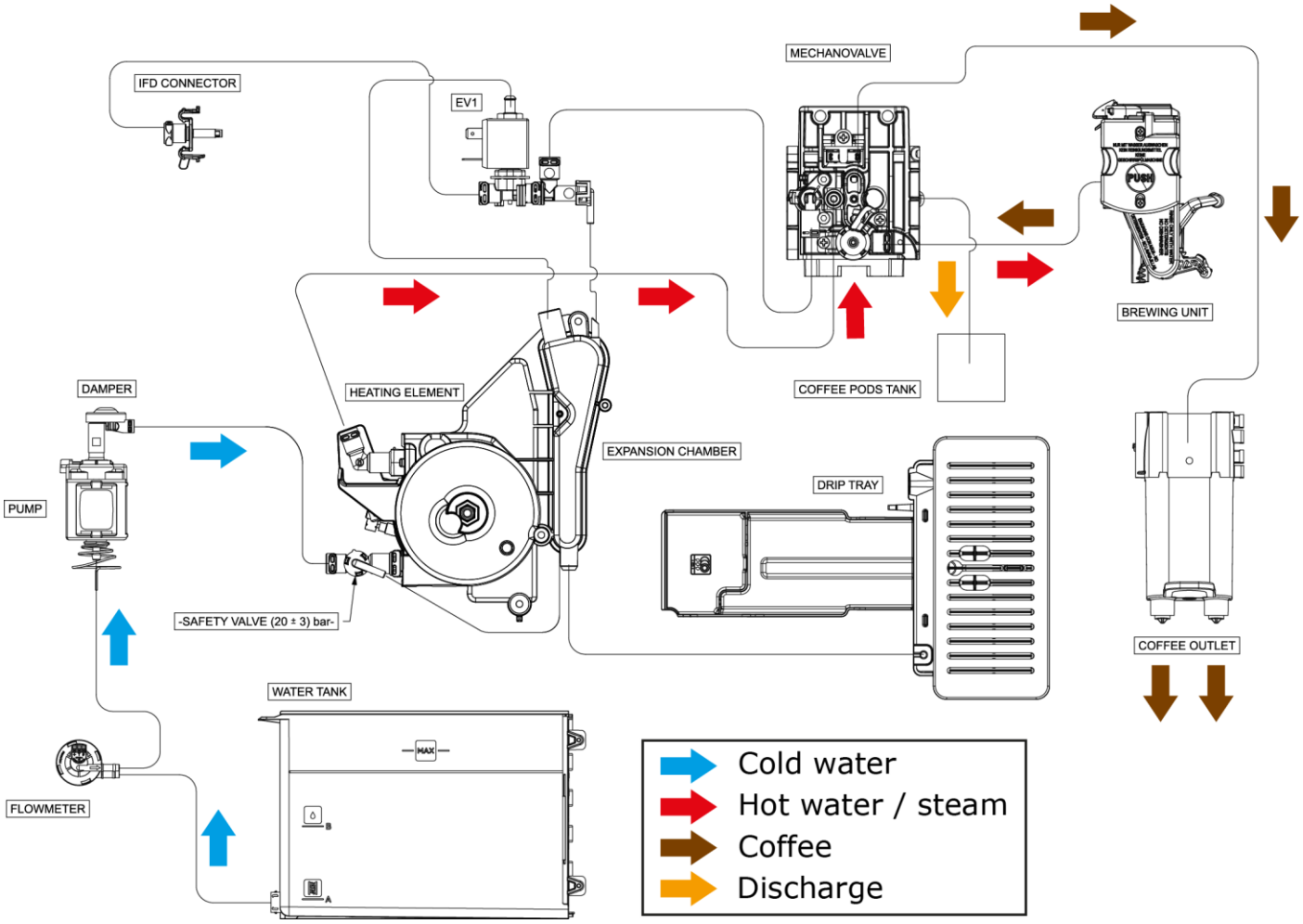

Espresso Coffee Preparation Steps:

1. The Thermoblock is activated.
2. The Grinder is activated for a certain timing (based on the coffee taste selection).
3. The Infuser moves to the mechanical valve
4. The Pump is activated for a couple of seconds for pre-infusion
5. The Pump restarts in continuous mode to deliver the espresso coffee
6. The Pump stops, the Thermoblock turns OFF.
7. The Infuser moves away from the mechanical valve and releases the coffee pod.
8. The Mechanical Valve discharges the excess of water/coffee to the grounds container
9. The Infuser moves back to the “Ready for Coffee” position.

5.3 HOT WATER PREPARATION

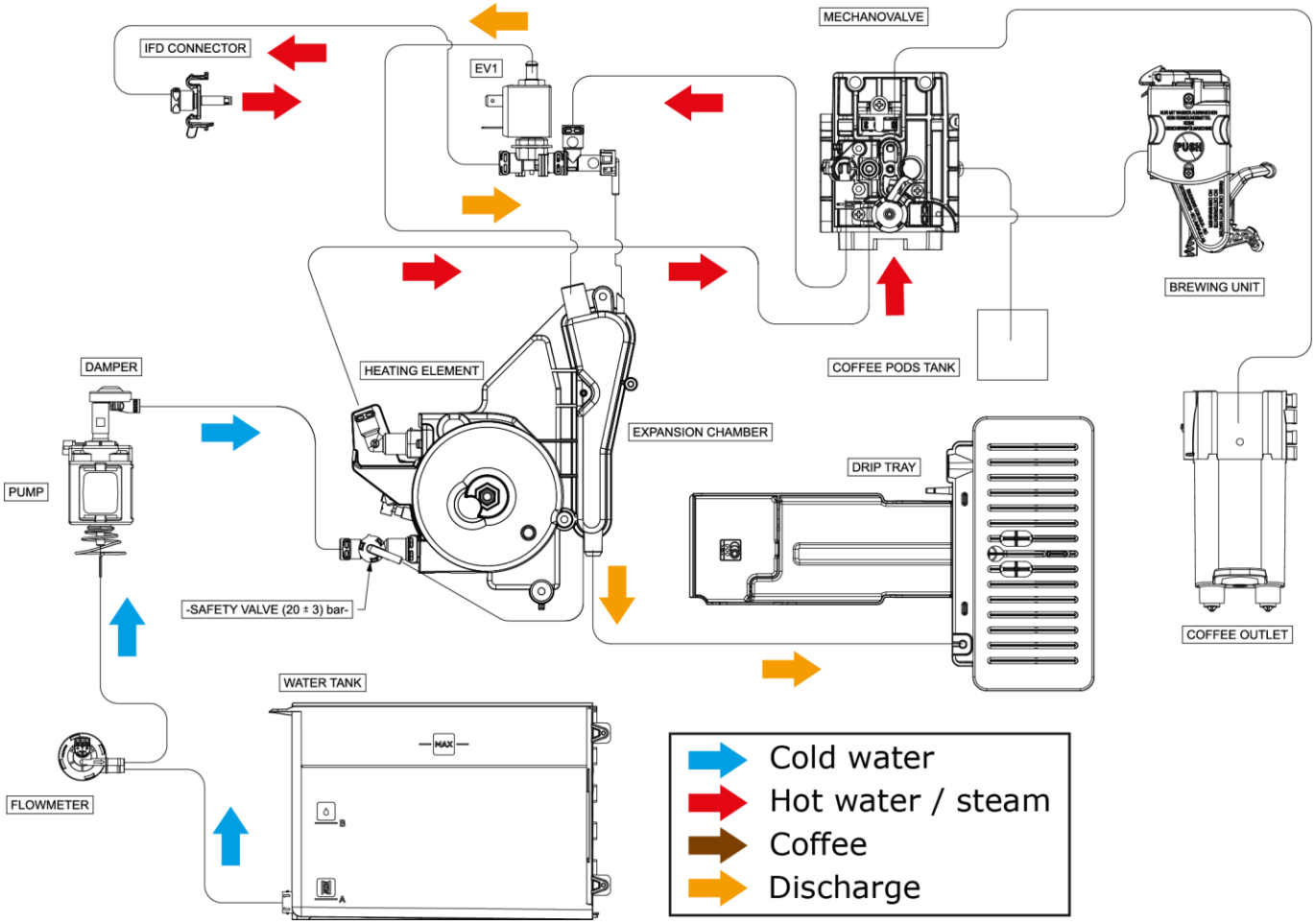

Hot Water Preparation Steps:

1. The EV1 solenoid valve is activated.
2. The Thermoblock is activated.
3. The Pump is activated in fast pulsing mode for a certain timing.
4. The Hot Water is delivered through the hot water accessory attached to the nozzle.
5. The Pump stops, the EV1 solenoid valve and the Thermoblock are deactivated.
6. The residual water is discharged by the EV1 solenoid valve into the drip tray.

IMPORTANT NOTICE: This function can be activated only if the hot water accessory is attached to the nozzle.

5.4 MILK FROTH PREPARATION

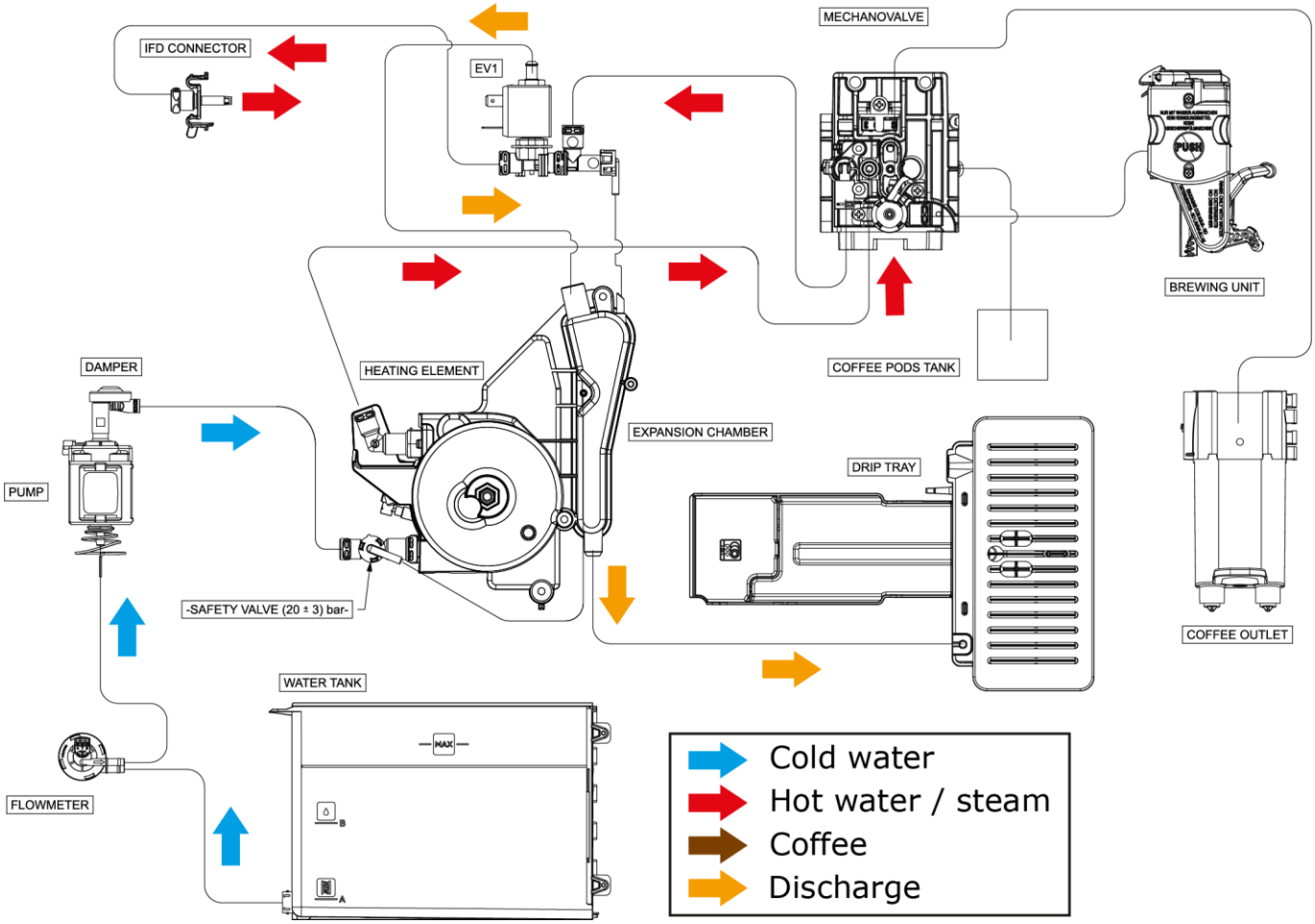

Milk Froth Preparation Steps (for both LatteCrema Hot and LatteCrema Cold when available):

1. The EV1 solenoid valve is activated.
2. The Thermoblock is activated (temperature set point above 100°C).
3. The Pump is activated in slow pulsing mode for a certain timing.
4. The Steam is injected from the nozzle into the milk jug and mixed with the air (according to the milk froth knob position) to froth the milk.
5. The Pump stops, the EV1 solenoid valve and the Thermoblock are deactivated.
6. The residual steam and pressure is discharged by the EV1 solenoid valve into the drip tray.

IMPORTANT NOTICE: This function can be activated only if the milk jug is attached to the nozzle.

6 TEST MODE

To access the **Test Mode**:

1. The appliance must be connected to the power socket and in stand-by mode.
2. Remove the drip tray and wait until the message “Insert the Drip Tray” will appear on the display.
3. Press in sequence the three buttons as indicated in the below picture:



The below page will be shown on the display:

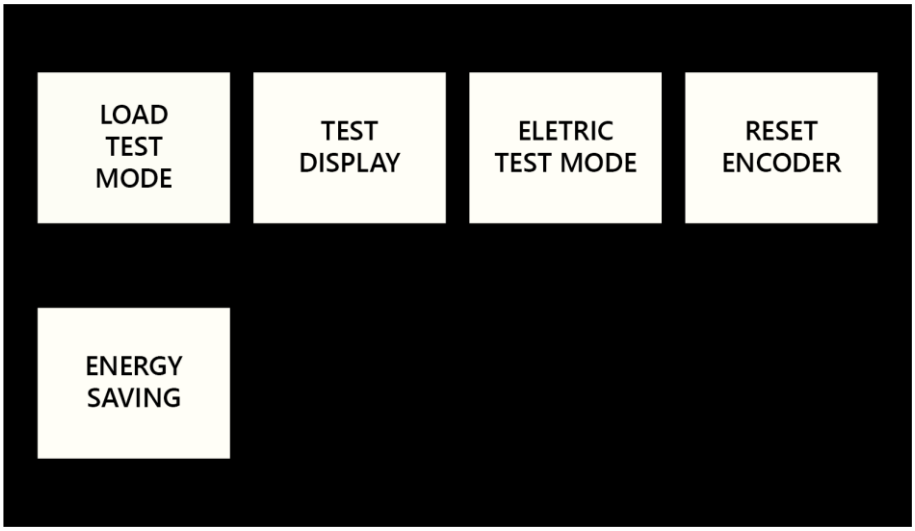

Within 10 seconds, insert the drip tray and select one of the below functions:

a. **LOAD TEST MODE:** Allows to manually activate the components of the appliance, to check the operation of the NTC sensors and check the correct operation of the reed and micro switches.
b. **TEST DISPLAY:** Allows to test the functioning of all the areas of the soft touch buttons and of the TFT display.

IMPORTANT NOTICE: After the execution of the TEST DISPLAY the appliance will be reset to "first use", i.e. it will reset the water softener filter status, it will ask again to set the language, to set the water hardness and to fill the water circuit.

IMPORTANT NOTICE: In case the machine would be reset to "first use" through the TEST DISPLAY or by replacing the main PCB, it is recommended to provide the customer a new Total Hardness Test indicator paper (spare part no. 5532110300), so he/she will be able to properly set the appliance according to the real water hardness in use with the coffee machine:



c. **ELECTRIC TEST MODE:** This feature is used only for tests at the manufacturing plant.

d. **RESET ENCODER:** It resets the value of the maximum position reached by the infuser.

e. **ENERGY SAVING:** It allows to change the default status for the energy saving function of the machine.

6.1 EXPLANATION OF THE LOAD TEST MODE BUTTONS AND FUNCTIONS

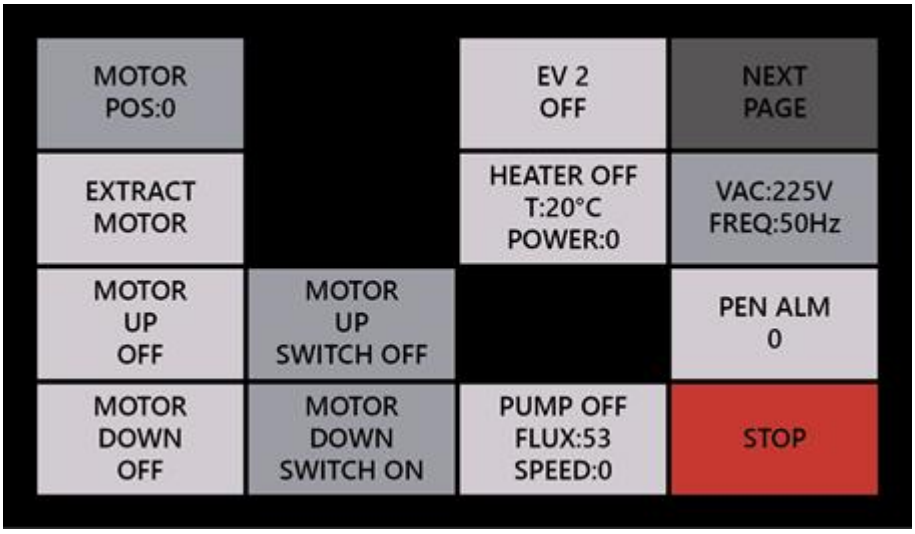

MOTOR: Indicates when the transmission motor is active. **POS:** Encoder value of the Hall sensor.		**EV1:** Activates the solenoid valves. **NOTE:** Some combinations are forced to avoid damages.	**NEXT PAGE:** Moves to next page of menu.
EXTRACT MOTOR: Moves the infuser to the extraction position.		**HEATER:** Blue when the Thermoblock is active. (*) **T:** Temperature of the NTC of Thermoblock. **POWER:** Absorbed power from 0 to 10.	**VAC:** Current voltage.
MOTOR UP: Blue when the motor is moving towards UP position. If pressed, motor starts.	**MOTOR UP SWITCH:** Blue when the infuser is in UP position. **ON:** When pressed (infuser in UP position).		**PEN ALM:** shows the pending alarms (see the chapter **6.3 PEN ALM**).
MOTOR DOWN: Blue when the motor is moving towards DOWN position. If pressed, motor starts.	**MOTOR DOWN SWITCH:** Blue when the infuser is in DOWN position. **OFF:** When pressed (infuser in DOWN position).	**PUMP:** Activates the pump for 200 flowmeter pulses (about 21 sec). **FLUX:** Indicates how many pulses passed (after 1 cycle of PUMP the number will be around 200). **SPEED:** Water flow in cc/s	**STOP:** Interrupts any active load.

(*) By pressing HEATER, the Thermoblock is activated for 5 seconds.

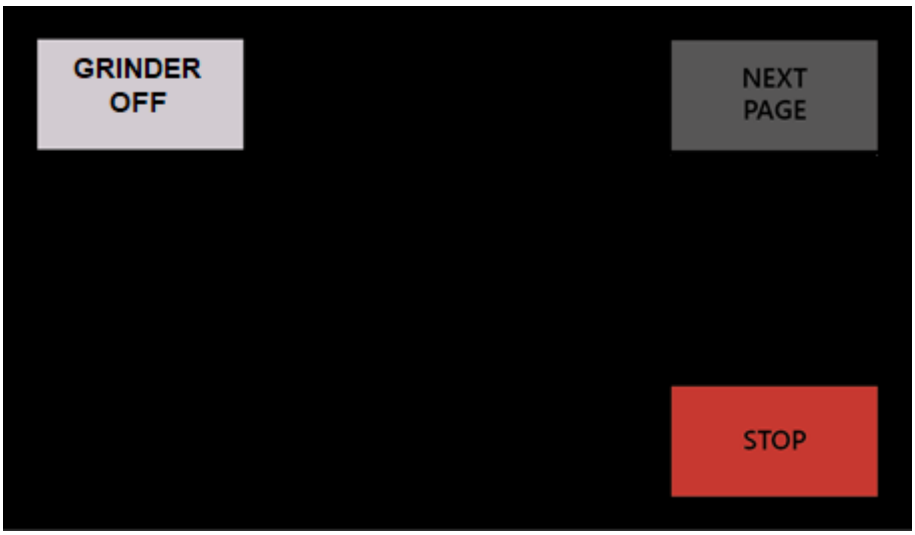

GRINDER: Activates the grinder for 4 seconds.

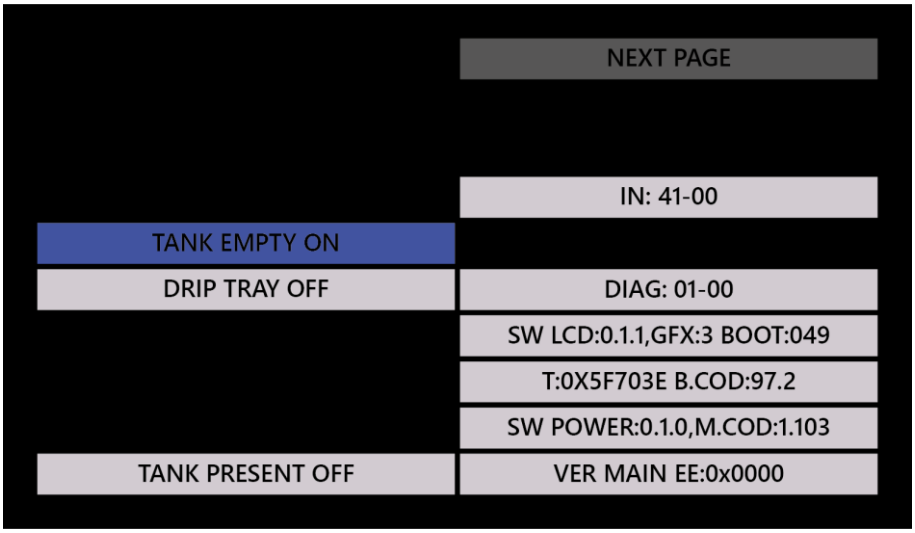

	NEXT PAGE: Moves to next page of menu.
TANK EMPTY: status of the empty water tank reed sensor.	
DRIP TRAY: status of the drip tray presence micro switch.	**RELEASE VERSIONS FOR ALL THE SOFTWARE PACKAGES INCLUDED IN THE APPLIANCE**.
TANK PRESENT: status of the water tank presence micro switch.	

6.2 PEN ALM

PEN ALM means **Pending Alarms**. It shows a code for the General Alarm possible causes according to the below table:

Load	Code	Issue
Motor	5	The limit micro switches are not pressed but the motor does not move
	6	With the motor activated, the DOWN limit micro switch is not released and the speed is 0
	8	The grounds container micro switch is interrupted. No motor activation
	11	The UP limit micro switch is interrupted while the DOWN limit micro switch is pushed.
	12	The encoder does not detect the position (disconnected) an the infuser stops on the DOWN limit micro switch
Heater	41	Broken Thermoblock NTC (open circuit or short circuit) Temporary overheating of the Thermoblock
	42	Broken TCO (deduced due to missed Thermoblock heating). Triggered after a few seconds

7 TROUBLESHOOTING

7.1 POSSIBLE TESTS WHICH CAN BE EXECUTED FROM THE LOAD TEST MODE

7.1.1 COFFEE CIRCUIT FLOW ACTIVATION

- Move the infuser to the UP position (MOTOR UP).
- Activate the pump.

The water will pass through the flow meter, the Thermoblock, the mechanical valve, the infuser and will come out from the coffee spouts.

7.1.2 HOT WATER AND STEAM FLOW ACTIVATION

- The infuser must not be in the upper position.
- Activate the EV1 solenoid valve.
- Activate the pump.

The water will pass through the flow meter, the Thermoblock, the mechanical valve's by-bass and the EV1 solenoid valve. Finally, the hot water will come out from the hot water spout connected to the IFD nozzle.

IMPORTANT NOTICE: The **hot water spout must be connected** to allow the manual activation of the EV1 solenoid valve.

7.2 ELECTRIC CHECKS DIRECTLY ON THE COMPONENTS

7.2.1 HEATING ELEMENT RESSISTANCE CHECK

- Thermoblock Resistance Value: **≈ 35 Ohms.**

7.2.2 RESISTANCE/TEMPERATURE CHARACTERISTICS FOR THE NTC SENSOR

TEMP. °C	MINIMUM kΩ	NOMINAL kΩ	MAXIMUM kΩ	Temp. Accy °C	Resi.Accy %
0.0	310.0	328.9	348.8	± 1.17	± 6.05
20.0	118.6	124.6	130.9	± 1.10	± 5.00
40.0	50.75	52.85	55.02	± 1.01	± 4.10
60.0	23.82	24.61	25.43	± 0.92	± 3.31
80.0	12.09	12.41	12.73	± 0.81	± 2.62
100.0	6.557	6.691	6.825	± 0.60	± 2.00
120.0	3.664	3.759	3.855	± 0.94	± 2.55
140.0	2.161	2.228	2.296	± 1.22	± 3.06
160.0	1.327	1.375	1.423	± 1.51	± 3.51
180.0	0.8445	0.8781	0.9126	± 1.82	± 3.93
200.0	0.5541	0.5783	0.6033	± 2.14	± 4.32

7.2.1 GROUND CHECK POINT FOR THE APPLIANCE

In order to check the main ground connection of the appliance, insert the ground tester probe from the round hole located under the basement of the appliance on the Thermoblock's side until it will touch the Thermoblock's metal surface, as displayed in the below picture:

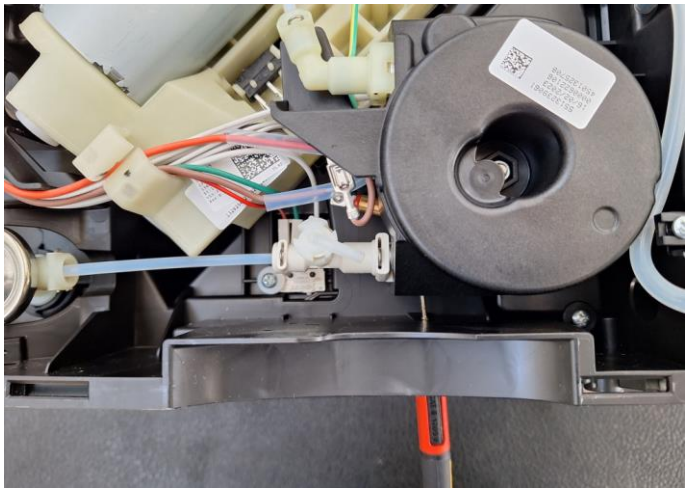



7.3 COFFEE TEMPERATURE TEST

Complaints from end users about coffee temperature are quite frequent. They are mainly due to incorrect appliance adjustments or to an incorrect expectation by the customer.

A **coffee temperature measurement** is required all the times any of these complaints are encountered.

To perform the coffee temperature test, follow in sequence the below steps:

1. Turn the appliance ON
2. Set the maximum temperature profile
3. Run 1-2 rinse cycles to warm up the hydraulic circuit
4. Select to prepare a **X2 ESPRESSO COFFEE** (refer to the user manual for more details)
5. Start the coffee preparation
6. Wait until at least 20ml of coffee have been delivered into the cup
7. Measure the coffee flow temperature at about 2÷10mm from the coffee spout, as shown in the below picture:

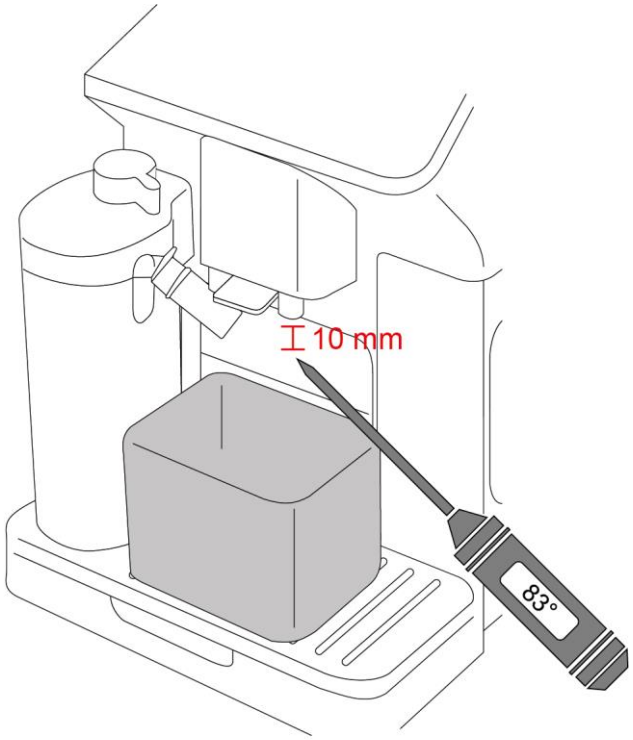

The **optimal indicative temperature measurement** for coffee should be:

- **83°C ± 3°C** for the medium level of temperature

Refer to the user manual for more details to how set the level of temperature.

7.4 FROTHED MILK CONSISTENCY AND TEMPERATURE TEST

A frothed hot milk consistency and temperature test can be required whenever the Serviceman is getting complaints from the end user about the quality or the temperature of the hot milk beverages.

To perform the frothed hot milk consistency and temperature test, follow in sequence the below steps:

1. Turn the appliance ON.
2. Fill the milk jug with 200ml of **semi-skimmed** milk at a temperature of 5°C±2°C.
3. Insert the lid to the jug and connect it to the appliance.
4. Set the maximum level of froth by rotating the frothing adjustment knob on the jug lid accordingly.
5. Place a 250ml PIREX graduated container under the milk spout.
6. Select the HOT MILK beverage and wait until at least 80ml of frothed milk have been delivered into the container.
7. Measure the milk flow temperature during the delivery at about 2÷10mm from the spout, as shown in the below picture:

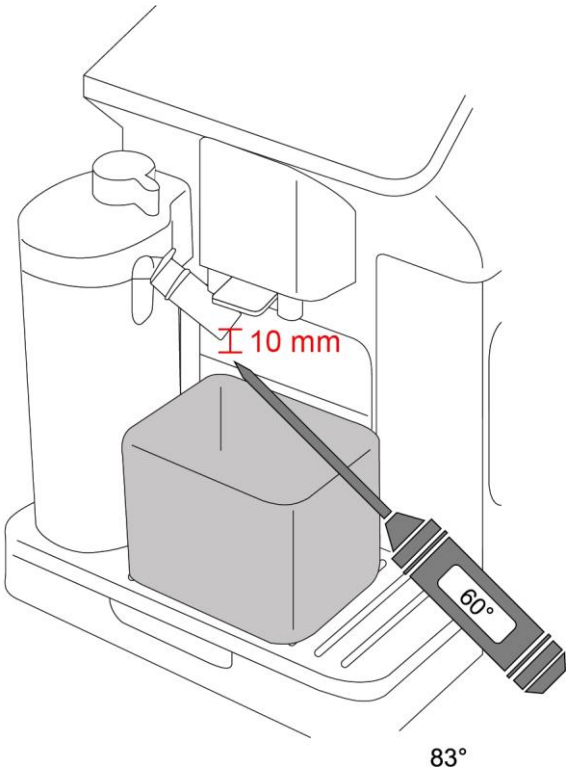

The **optimal conditions for the frothed milk** (without coffee) should be as resumed below:

- **Froth appearance: small bubbles without splashes.**
- **Milk temperature: 60°C±5°C.**
- **Froth amount: 50% milk and 50% froth.**

8 DEMO MODE ACTIVATION

The below procedure explains how to start the continuous displaying of the demonstration video on the screen, for instance in case the appliance would be exhibited on the shelf of a shop.

1. The appliance must be plugged-in and in stand-by mode.
2. Remove the drip tray.
3. When the request to insert the drip tray prompts on the display, touch first the bottom-left corner and then the top-right corner of the touch screen:

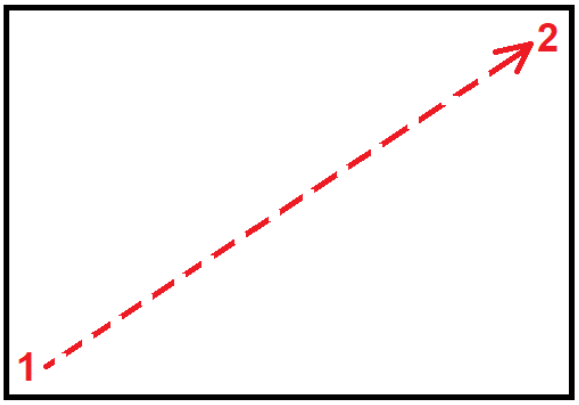

Insert the drip tray. The demonstration video (DEMO MODE) will start being displayed continuously on the screen until the appliance will be unplugged from the socket.