Data Sheet and Service Manual
ECAM450.65 ECAM450.86
ELETTA EXPLORE
Date: 15.01.2023



1 SUMMARY

2 TECHNICAL DATA....3
3 HYDRAULIC DIAGRAM....4
4 WIRING DIAGRAM....5
5 WORKING PRINCIPLE....7
5.1 MICROSWITCHES, SENSORS AND SOLENOID VALVES....7
5.2 COFFEE DELIVERY....8
5.3 HOT WATER DELIVERY....9
5.4 MILK FROTH PREPARATION....10
5.5 COLD COFFEE BREW....11
6 TEST MODE....12
6.1 PROCEDURE TO ACTIVATE TEST MODE, RESET ENCODER, BLUETOOTH AND ECO MODE 12
6.2 EXPLANATION OF THE TEST MODE BUTTONS....13
6.3 PEN ALM....15
7 TROUBLESHOOTING....16
7.1 POSSIBLE TESTS WHICH CAN BE EXECUTED FROM THE TEST MODE....16
7.1.1 COFFEE BRANCH FLOW ACTIVATION....16
7.1.2 HOT WATER BRANCH FLOW ACTIVATION....16
7.1.3 STEAM BRANCH FLOW ACTIVATION....16
7.1.4 COLD BREW BRANCH FLOW ACTIVATION....16
7.2 ELECTRIC CHECKS DIRECTLY ON THE COMPONENTS....17
7.2.1 HEATING ELEMENTS RESISTANCE CHECK....17
7.2.2 RESISTANCE/TEMPERATURE CHARACTERISTICS FOR NTCs SENSORS....17
7.2.3 GROUND CHECK POINT FOR THE APPLIANCE....18
7.3 HOT COFFEE TEMPERATURE TEST....19
7.4 FROTHED HOT MILK CONSISTENCY AND TEMPERATURE TEST....20
7.5 COLD BREW EVALUETION....21
7.6 FROTHED COLD MILK CONSISTENCY AND TEMPERATURE TEST....22
8 DEMO MODE ACTIVATION....23

2 TECHNICAL DATA

Voltage – Frequency – Input Power	220-240 V – 50 / 60 Hz – 1450 W
Stand-by Button OFF	≈ 0.23 Wh

COMPONENTS

Pump	220-240 V AC – 70 W – 19 bar
Grinder motor	AC
Transmission motor	DC with position encoder
Solenoid valves EV1, EV2	AC

Coffee thermoblock

- Temperature probe	NTC sensor
- Thermal fuse TCO	192 °C
- Heating element	230 V AC – 1400 W

Steam generator

- Temperature probe	NTC sensor
- Thermal fuse TCO	318 °C
- Heating element	230 V AC – 1100 W

3 HYDRAULIC DIAGRAM

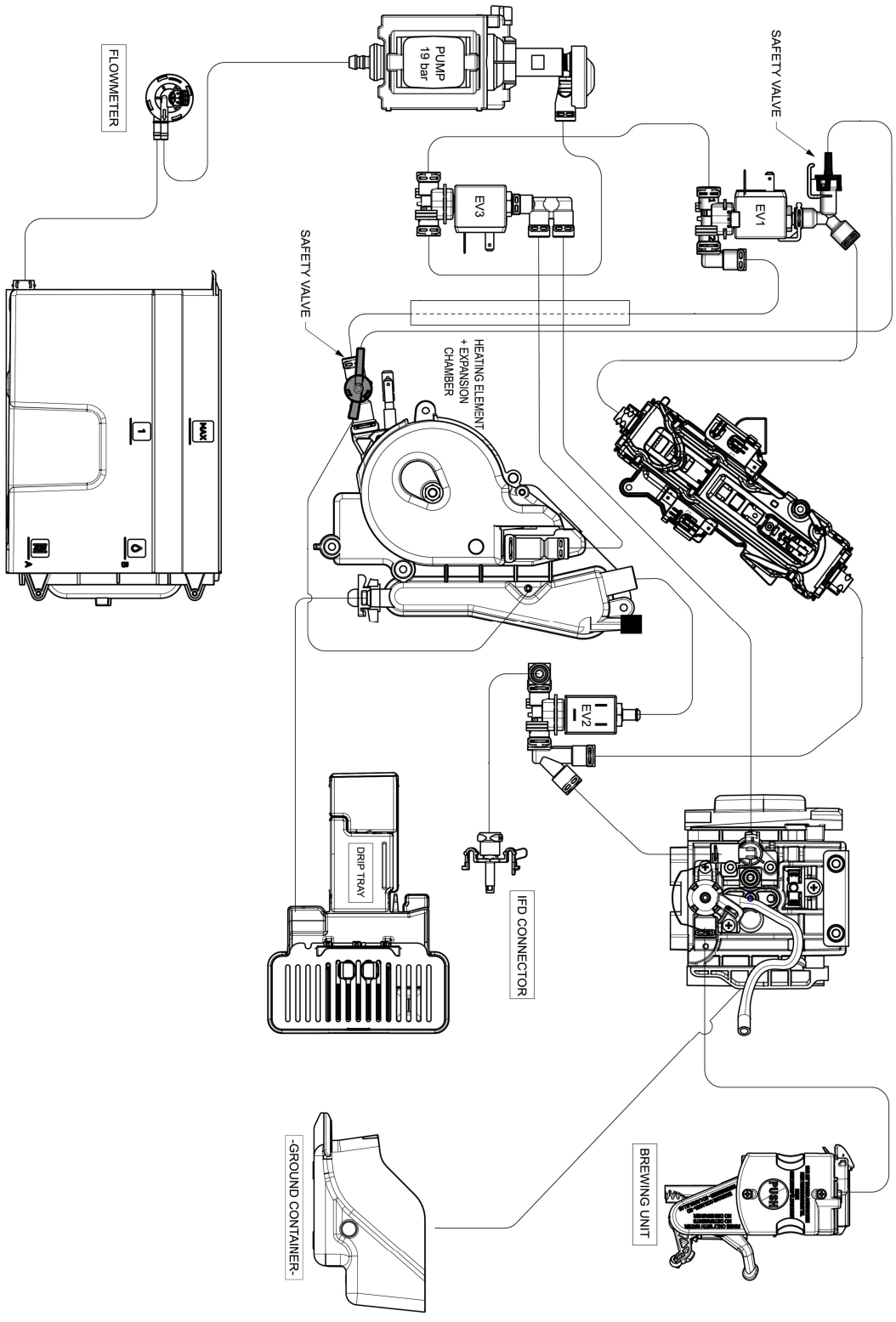

4 WIRING DIAGRAM

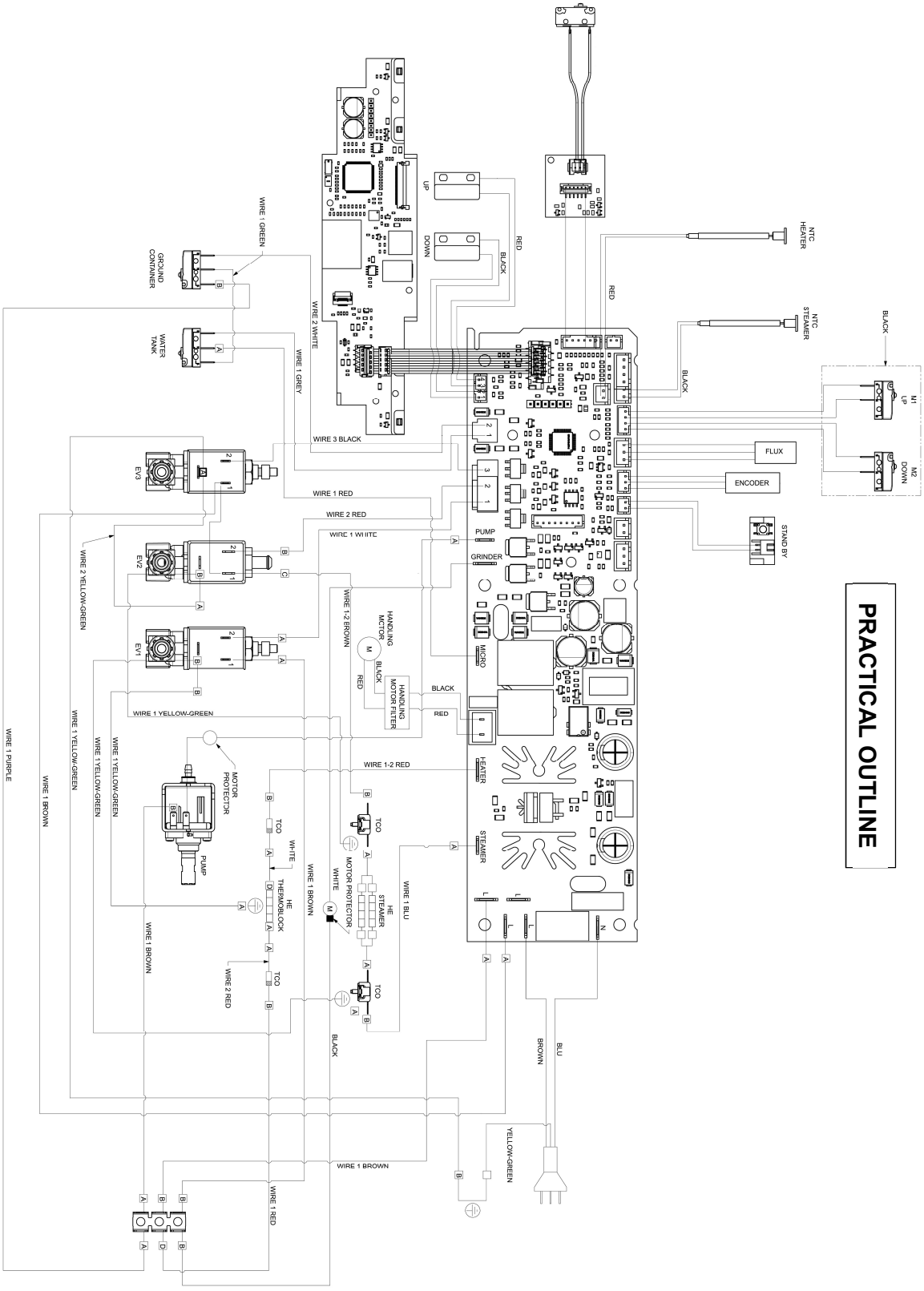

THEORETICAL OUTLINE

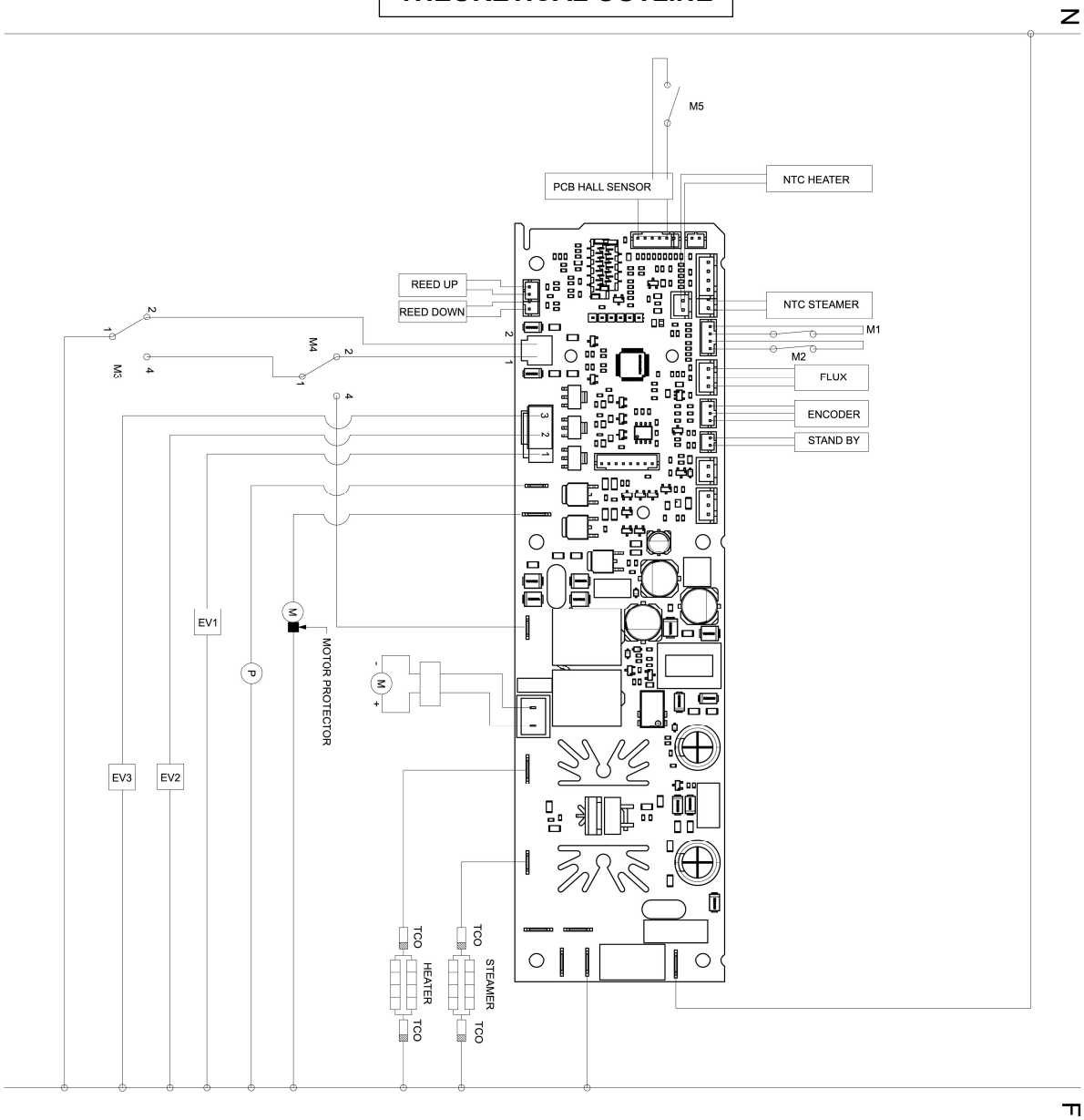

LEGEND	CO
M1	MICROSWITCH UPPER (GROUP INFUSION MOTOR)
M2	MICROSWITCH LOWER (GROUP INFUSION MOTOR)
M3	MICROSWITCH DRAWER (POWER)
M4	MICROSWITCH WATER TANK (POWER)
M5	MICROSWITCH MILK CONTAINER
EV1	ELECTROVALVE 3 WAY - COFFEE/STEAM
EV2	ELECTROVALVE 3 WAY - STEAM
EV3	ELECTROVALVE 3 WAY - HOT/COLD SWITCH
L	PHASE
N	NEUTRAL
TCO	THERMAL CUT OFF
HE	HEATING ELEMENT

5 WORKING PRINCIPLE

5.1 MICROSWITCHES, SENSORS AND SOLENOID VALVES

MICROSWITCHES	Function	Logic
M1 = UPPER MICROSWITCH	Detects when the infuser is on top position	"NA" when the infuser is in top position
M2 = LOWER MICROSWITCH	Detects when the infuser is on down position	"NC" when the infuser is in down position
M3 = DRAWER MICROSWITCH	Detects when the drip tray is in correct position	3-pin micro switch. When the drip tray is inserted: - the contact for the drip tray detection is OPEN; - the contact for the transmission motor power supply is CLOSED.
M4 = WATER TANK MICROSWITCH	Detects the presence of the water tank	3-pin micro switch. When the water tank is inserted: - the contact for the water tank detection is OPEN; - the contact for the transmission motor power supply is CLOSED.
M5 = MILK CONTAINER MICROSWITCH	Detects the presence of the hot water spout or the milk jugs	"NC" when the accessory is present
REED AND ENCODER	**Function**	**Logic**
ACCESSORIES SENSOR PCB	Detects which accessory is attached	H1 ON; H2 OFF; H3 OFF = hot water spout H1 OFF; H2 ON; H3 ON = hot milk jug H1 OFF; H2 ON; H3 OFF = cold milk jug
REED SENSOR EMPTY WATER TANK	Detects when the water level is at minimum	
REED SENSOR LOW WATER TANK	Detects when the water level is too low for a "long beverage" preparation	
HALL SENSOR ENCODER	Detects rotations of transmission motor	
SOLENOID VALVES	**Function**	**Logic**
EV1 = 3 ways solenoid valve	Allows the water flow going to the thermoblock OR to the steamer	When activated, the water flow goes to the thermoblock When deactivated, the water flow goes to the steamer
EV2 = 3 ways solenoid valve	Allows the steam flow AND the water flow going to the IFD connector OR the eventual excess of water pressure to be discharged	When activated, the steam flow OR the water flow goes to the IFD connector When deactivated, the eventual excess of water pressure is discharged to the expansion chamber
EV3 = 3 ways solenoid valve	Allows the COLD water flow going to EV1 OR directly to mechanical valve during the cold brew preparation	When activated, the COLD water flow goes to EV1 When deactivated, the COLD water flow goes to mechanical valve

5.2 COFFEE DELIVERY

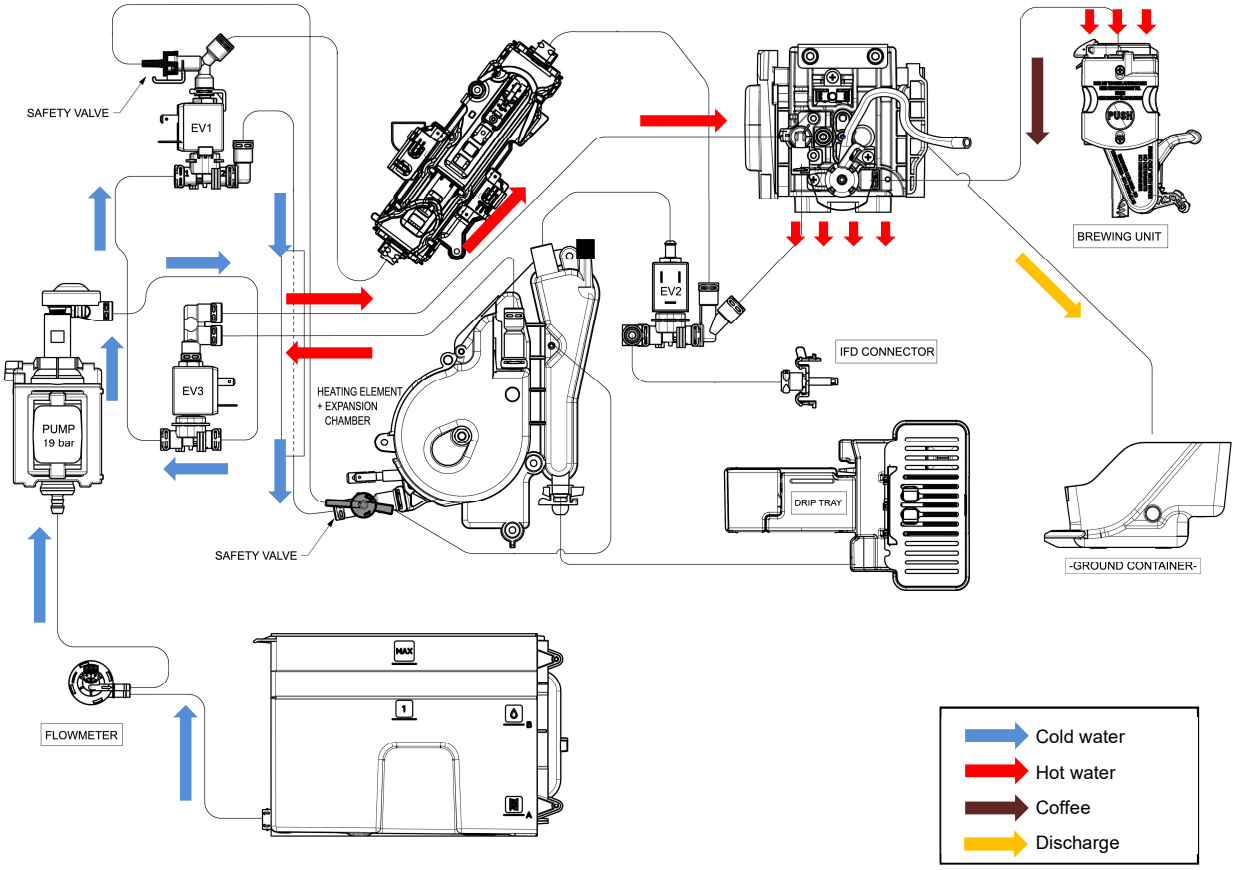

Espresso delivery steps:

1. EV1 is activated
2. EV2 is deactivated
3. EV3 is activated
4. Thermoblock is activated
5. Grinder is activated for a certain timing (based on the coffee taste selection)
6. Infuser moves to the mechanical valve
7. Pump is activated for a couple of seconds for pre-infusion
8. Pump restarts for coffee delivering
9. Pump and thermoblock stop, EV1 and EV3 close
10. Infuser moves away from the mechanical valve and releases the coffee pod
11. Mechanical valve discharges excess water/coffee to the ground container
12. Infuser is moved back to the “Coffee Ready” position

5.3 HOT WATER DELIVERY

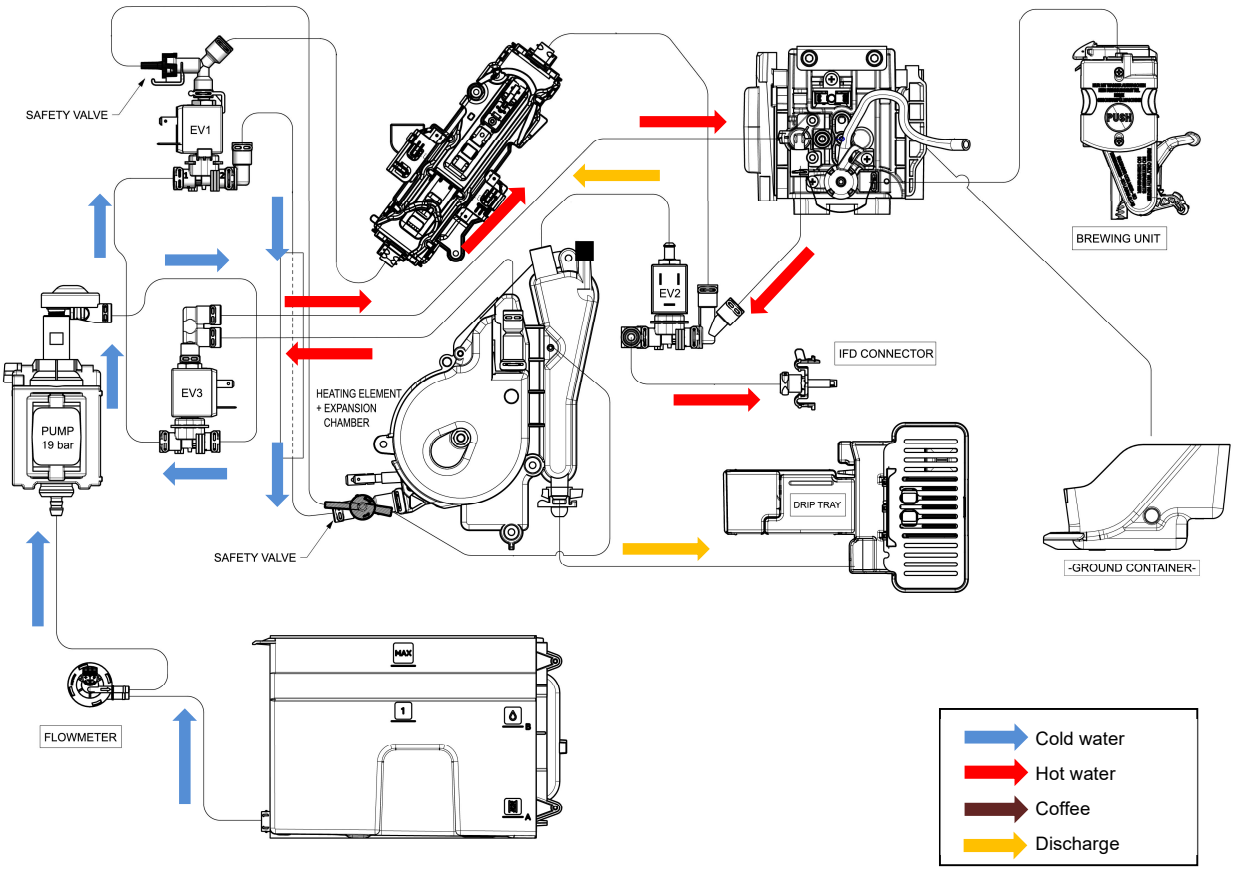

Hot water delivery steps:

1. EV1, EV2 and EV3 are activated
2. Thermoblock is activated
3. Pump is activated in fast pulsing mode for a certain timing
4. Hot water is delivered through the IFD connector
5. Pump stops, EV1, EV2 and EV3 are deactivated

5.4 MILK FROTH PREPARATION

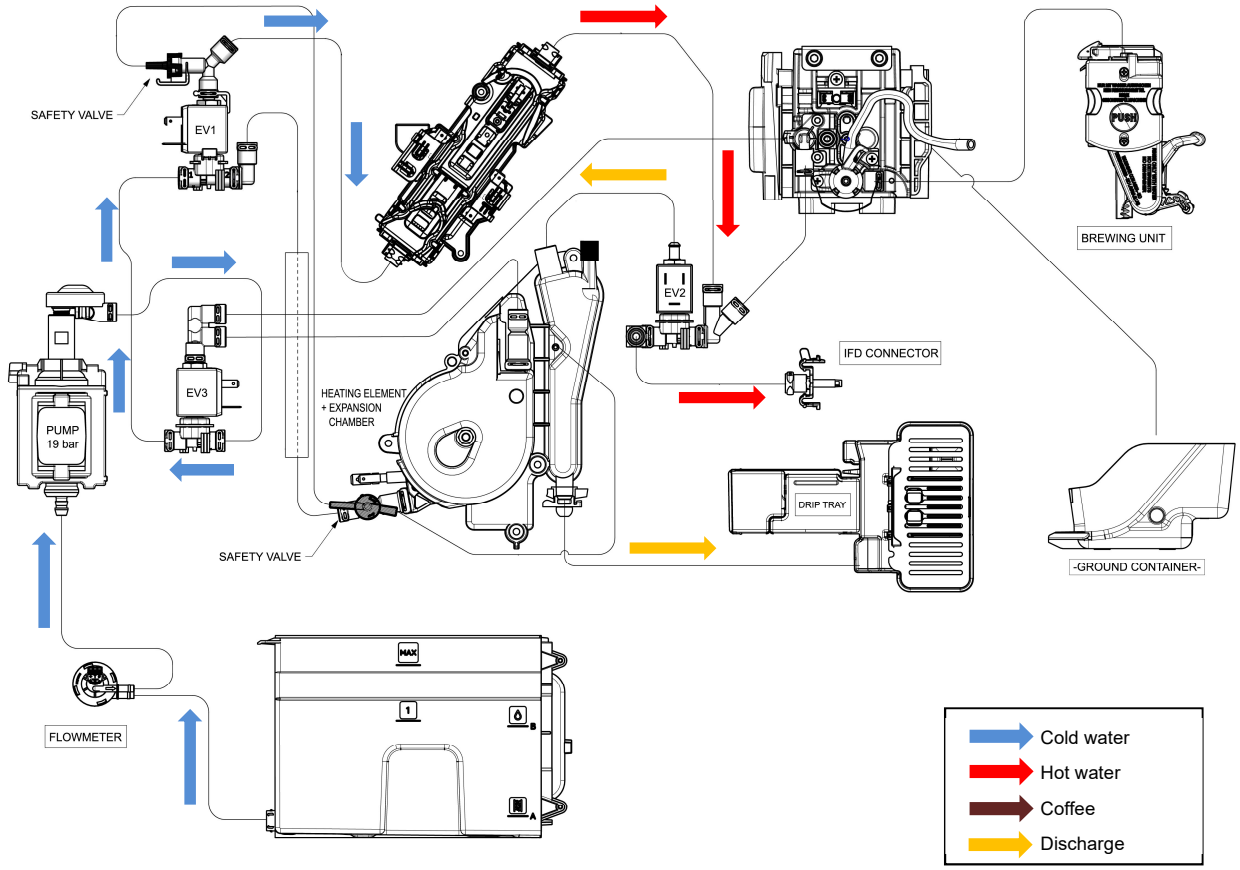

Milk foam delivery steps:

1. EV1 is deactivated
2. EV2 is activated
3. EV3 is activated
4. Steamer is activated
5. Pump is activated in slow pulsing mode for a certain timing
6. The steam is injected from the steam nozzle into the milk jug and mixed with the air (according to the milk froth knob position) to froth the milk
7. EV1, EV2, EV3, steamer and pump are deactivated
8. EV2 discharges excess of pressure to expansion chamber/drip tray

Milk jug cleaning steps:

1. EV1 is deactivated, EV2 and EV3 are activated
2. Steamer is activated
3. Pump is activated in very slow pulsing mode for a certain timing
4. Hot water is delivered through the nozzle and air from the milk jug knob in CLEAN position
5. EV1, EV2, EV3, steamer and pump are deactivated

5.5 COLD COFFEE BREW

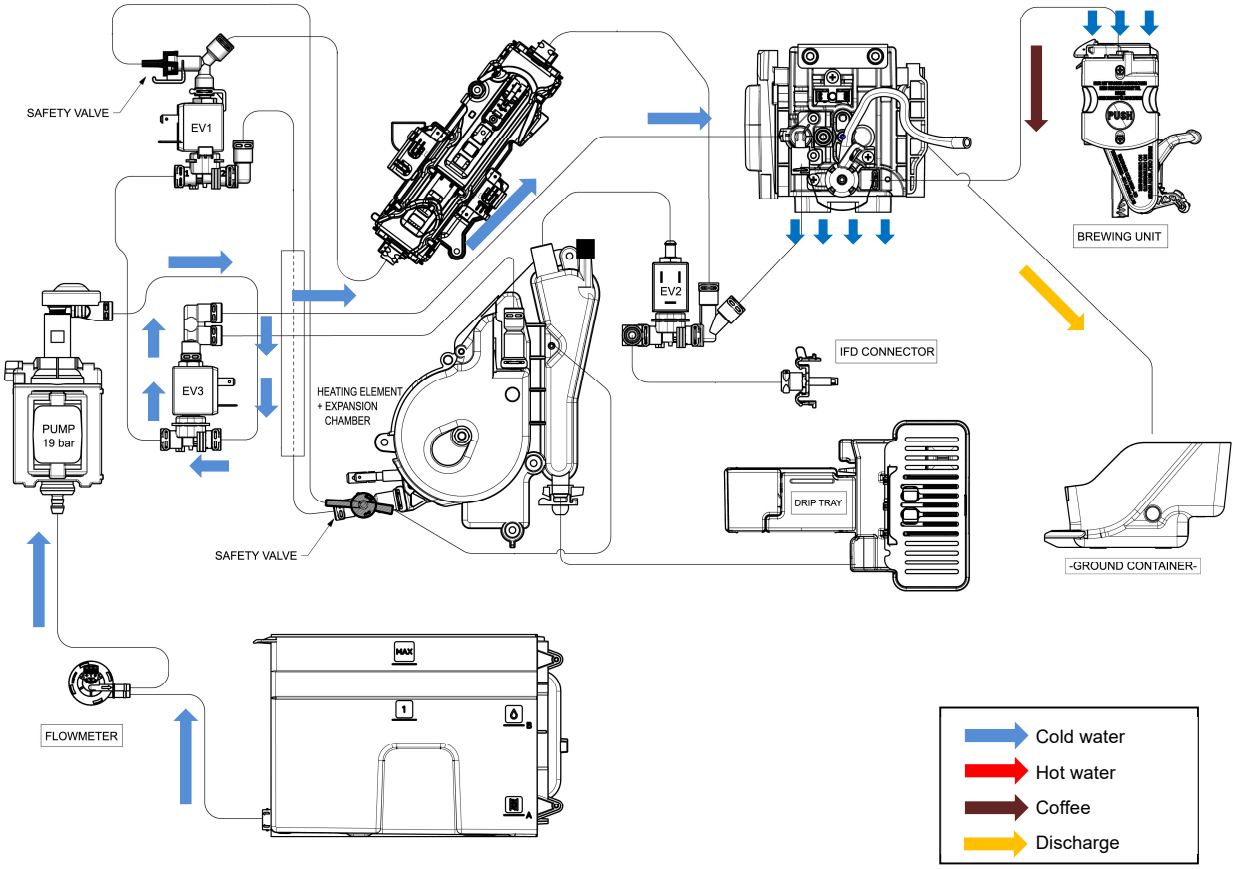

Cold coffee brew steps:

1. EV1 is activated (for a pressure balancing reason)
2. EV2 is deactivated
3. EV3 is deactivated
4. Thermoblock is deactivated
5. Grinder is activated for a certain timing (based on the coffee taste selection)
6. Infuser moves to the mechanical valve
7. Pump is activated in pulsing mode for a certain timing for coffee brewing
8. Infuser moves away from the mechanical valve and releases the coffee pod
9. Mechanical valve discharges excess water/coffee to the ground container
10. Infuser is moved back to the “Coffee Ready” position
11. EV1 is deactivated

6 TEST MODE

6.1 PROCEDURE TO ACTIVATE TEST MODE, RESET ENCODER, BLUETOOTH AND ECO MODE

1. The appliance must be plugged-in and in stand-by mode.
2. Remove the water tank.
3. When the request to insert the water tank prompts on the display, touch the four corners of the screen in the sequence as shown in the below picture:

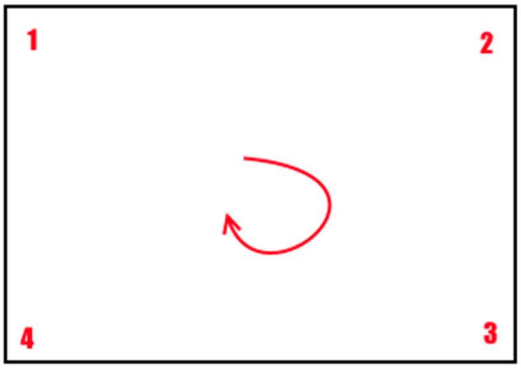

4. Insert the water tank.
5. Select one of the following options:
   a. **LOAD TEST MODE:** see next pages.
   b. **TEST DISPLAY:** tests the functioning of all the areas of the touchscreen display (after this procedure, the machine will reset the language and will ask for initial priming).
   c. **ELECTRIC TEST MODE:** this feature is used only for tests in the production line.
   d. **RESET ENCODER:** activates the procedure for the encoder reset.
   e. **ENERGY SAVING:** activates or deactivates the energy saving function (this will modify the set-point temperatures).

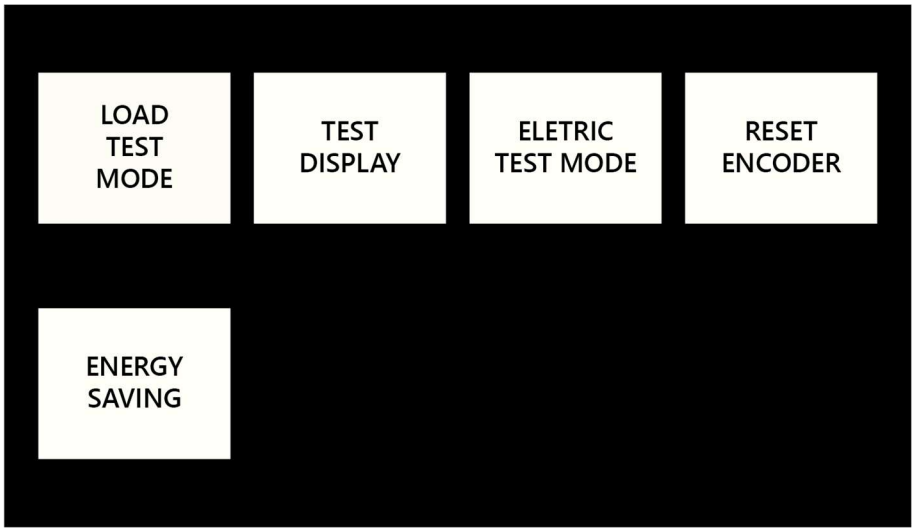

NOTE: The appliance will stay in test mode for a limited time if no actions are made.

6.2 EXPLANATION OF THE TEST MODE BUTTONS

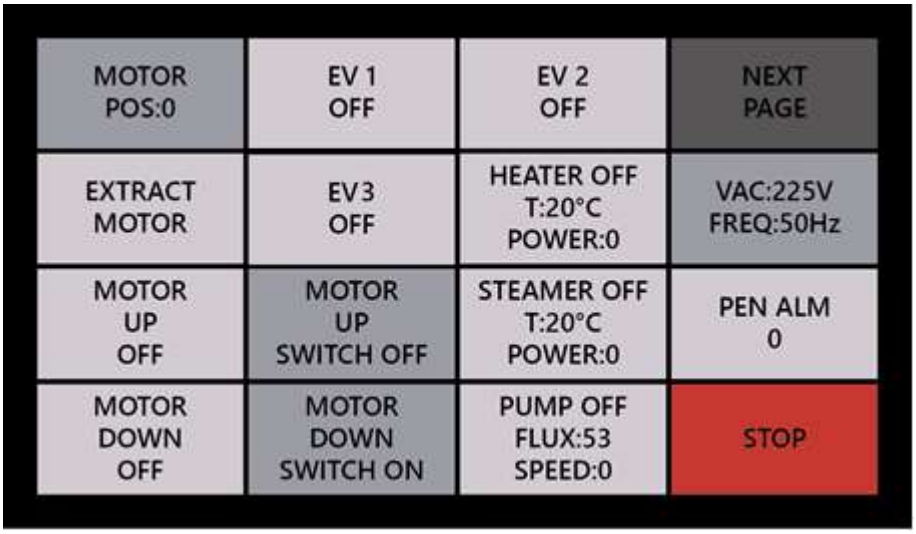

MOTOR: Indicates when the transmission motor is active. **POS:** Encoder value of the Hall sensor.	**EV1:** Activate the solenoid valves. **NOTE:** Some combinations are forced to avoid damages.	**EV2:** Activate the solenoid valves. **NOTE:** Some combinations are forced to avoid damages.	**NEXT PAGE:** Moves to next page of menu.
EXTRACT MOTOR: Moves the infuser to the extraction position.	**EV3:** Activate the solenoid valves. **NOTE:** Some combinations are forced to avoid damages.	**HEATER:** Blue when the thermoblock is active. * **T:** Temperature of the NTC of thermoblock. **POWER:** Absorbed power from 0 to 10.	**VAC:** Current voltage.
MOTOR UP: Blue when the motor is moving towards UP position. If pressed, motor starts.	**MOTOR UP SWITCH:** Blue when the infuser is in UP position. **ON:** When pressed (infuser in UP position).	**STEAMER:** Blue when the steamer is active. * **T:** Temperature of the NTC of steamer. **POWER:** Absorbed power from 0 to 10.	**PEN ALM:** shows the pending alarms (see the chapter **6.3 PEN ALM**).
MOTOR DOWN: Blue when the motor is moving towards DOWN position. If pressed, motor starts.	**MOTOR DOWN SWITCH:** Blue when the infuser is in DOWN position. **OFF:** When pressed (infuser in DOWN position).	**PUMP:** Activates the pump for 200 flowmeter pulses (about 21 sec). **FLUX:** Indicates how many pulses passed (after 1 cycle of PUMP the number will be around 200). **SPEED:** Water flow in cc/s	**STOP:** Interrupts any active load.

(*) By pressing HEATER or STEAMER, the corresponding load is activated for 5 seconds.

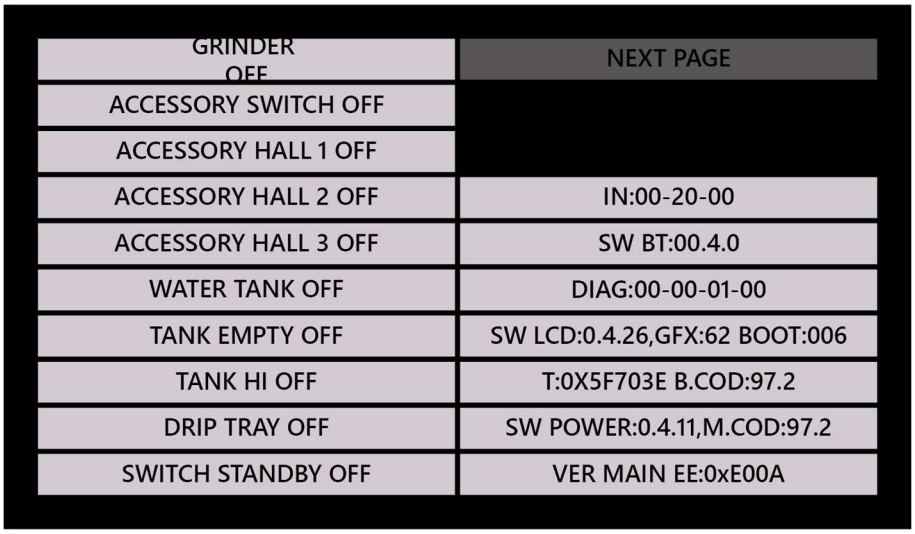

GRINDER: status of the grinder.	**NEXT PAGE:** Moves to next page of menu.
ACCESSORY SWITCH: status of the accessories micro switch.	
ACCESSORY HALL 1 / 2 / 3: status of the accessories reed sensors.	
WATER TANK: status of the water tank presence micro switch.	**RELEASE VERSIONS FOR ALL THE SOFTWARE PACKAGES INCLUDED IN THE APPLIANCE**.
TANK EMPTY: status of the empty water tank reed sensor.	
TANK HI: status of the “long beverages” reed sensor.	
DRIP TRAY: status of the drip tray presence micro switch.	
SWITCH STANDBY: status of the standby button.	

6.3 PEN ALM

PEN ALM means Pending Alarms. It shows a code for the general alarm possible causes according to the table below:

Load	Code	Issue
Motor	8	Too much time for the movement
	9	Inconsistency of the micro switches status
	11	With motor activated, the bottom micro switch is not released and the speed is 0
	11	Too much tries of position of the motor or motor broken / encoder broken
Heater	41	Broken steamer NTC (open circuit or short circuit) Temporary overheating of the thermoblock
	42	Broken TCO (deduced due to missing of thermoblock heating)
Steamer	62	Temporary overheating of the steamer
	63	Broken TCO (deduced due to missing of steamer heating)
	64	Broken steamer NTC (open circuit or short circuit)

7 TROUBLESHOOTING

7.1 POSSIBLE TESTS WHICH CAN BE EXECUTED FROM THE TEST MODE

7.1.1 COFFEE BRANCH FLOW ACTIVATION

1. Move the infuser to the UP position (MOTOR UP).
2. Activate the EV1 solenoid valve.
3. Activate the EV3 solenoid valve.
4. Activate the pump.

The water will pass through the flow meter, the EV1 solenoid valve, the EV3 solenoid valve, the thermoblock, the mechanical valve, the infuser and will come out from the coffee spout.

7.1.2 HOT WATER BRANCH FLOW ACTIVATION

5. The infuser does not have to be in upper position.
6. Activate EV1, EV2 and EV3 solenoid valves.
7. Activate the pump.

The water will pass through the flow meter, the EV1 and EV3 solenoid valve, the thermoblock, the mechanical valve and the EV2 solenoid valve. Finally, the water will come out from the IFD connector.

7.1.3 STEAM BRANCH FLOW ACTIVATION

1. The infuser does not have to be in upper position.
2. Activate EV3 and EV2 solenoid valves.
3. Activate the pump.

The water will pass through the flow meter, the EV3 solenoid valve, the third way of the EV1 solenoid valve, the steamer and the EV2 solenoid valve. Finally, the water will come out from the IFD connector.

7.1.4 COLD BREW BRANCH FLOW ACTIVATION

1. Move the infuser to the UP position (MOTOR UP).
2. Activate EV1 solenoid valve.
3. Deactivate EV2 and EV3 solenoid valves.
4. Activate the pump.

The water will pass through the flow meter, the third way of the EV3 solenoid valve, the mechanical valve, the infuser and will come out from the coffee spout.

7.2 ELECTRIC CHECKS DIRECTLY ON THE COMPONENTS

7.2.1 HEATING ELEMENTS RESISTANCE CHECK

- Thermoblock resistance value: **≈ 35 Ohms**.
- Steamer resistance value: **≈ 50 Ohms**.

7.2.2 RESISTANCE/TEMPERATURE CHARACTERISTICS FOR NTCs SENSORS

Resistance/temperature characteristics for the thermoblock NTCs:

RESISTANCE - TEMPERATURE CHARACTERISTICS					
TEMP. °C	MINIMUM kΩ	NOMINAL kΩ	MAXIMUM kΩ	Temp. Accy ±°C	Resi. Accy ±%
0	310	328,9	348,8	± 1.17	6,05
20	118,6	124,6	130,9	± 1.10	5
40	50,75	52,85	55,02	± 1.01	4,1
60	23,82	24,61	25,43	± 0.92	3,31
80	12,09	12,41	12,73	± 0.81	2,62
100	6,557	6,691	6,825	± 0.60	2
120	3,664	3,759	3,855	± 0.94	2,55
140	2,161	2,228	2,296	± 1.22	3,06
160	1,327	1,375	1,423	± 1.51	3,51
180	0,8445	0,8781	0,9126	± 1.82	3,93
200	0,5541	0,5783	0,6033	± 2.14	4,32

Resistance/temperature characteristics for the steamer NTCs:

RESISTANCE - TEMPERATURE CHARACTERISTICS				
TEMP. °C	MINIMUM kΩ	NOMINAL kΩ	MAXIMUM kΩ	Temp. Accy °C
0	310	328,9	348,8	± 1.17
20	118,6	124,6	130,9	± 1.10
40	50,75	52,85	55,02	± 1.01
60	23,82	24,61	25,43	± 0.92
80	12,09	12,41	12,73	± 0.81
100	6,557	6,691	6,825	± 0.68
120	3,726	3,823	3,921	± 0.96
140	2,228	2,297	2,425	± 1.26
160	1,392	1,441	1,492	± 1.58
180	0,904	0,94	0,977	± 1.92

7.2.3 GROUND CHECK POINT FOR THE APPLIANCE

In order to check the main ground connection of the appliance insert the ground tester probe from the round hole located on the basement of the appliance on the thermoblock side until it will touch the thermoblock metal surface, as displayed in the below picture:

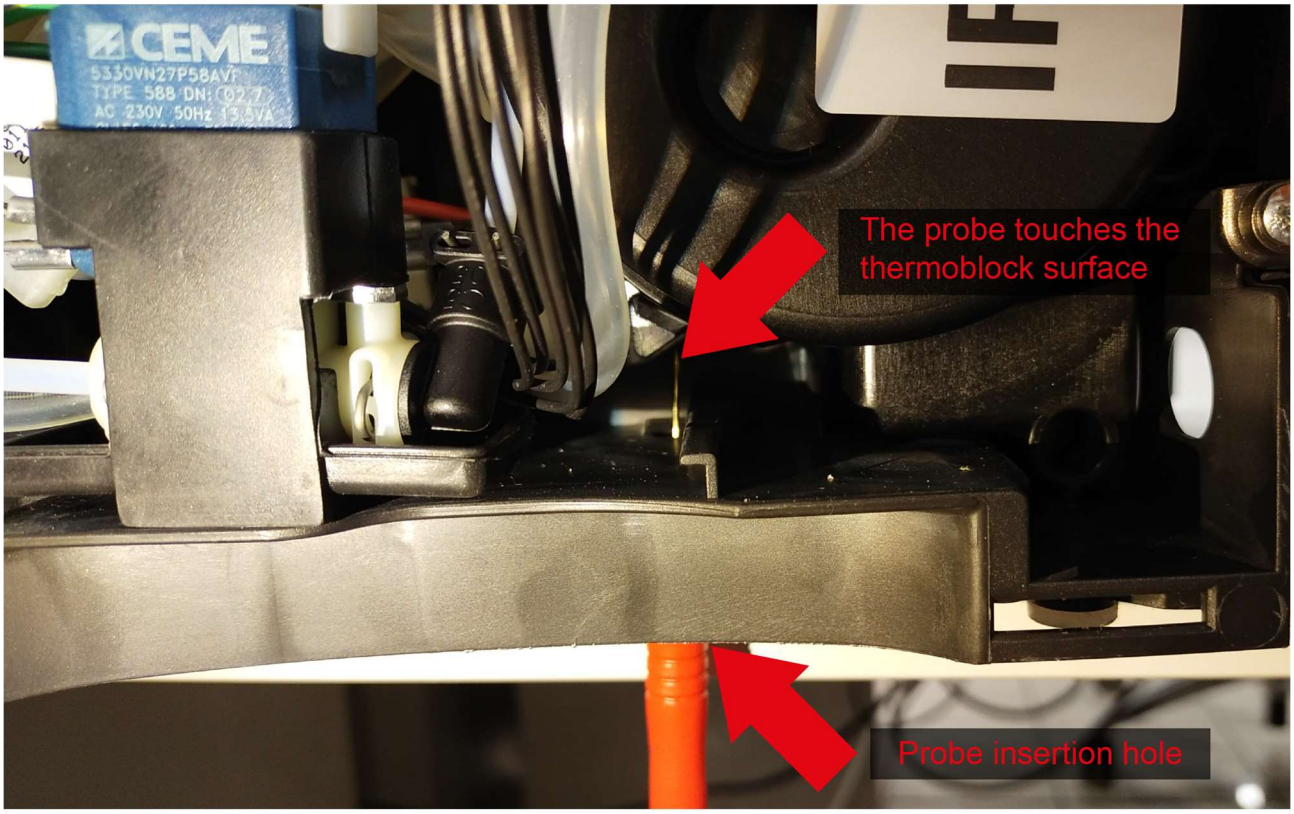

7.3 HOT COFFEE TEMPERATURE TEST

Complaints from end users about coffee temperature are quite frequent. They are mainly due to incorrect appliance adjustments or to an incorrect expectation by the customer.

A **coffee temperature measurement** is required all the times any of these complaints are encountered.

To perform the coffee temperature test, follow in sequence the below steps:

1. Turn the appliance ON.
2. Run a rinse cycle, to warm up the hydraulic circuit.
3. Set the temperature to the maximum level.
4. Select to prepare an **EXTRA-LONG ESPRESSO COFFEE** (refer to the user manual for more details).
5. Start the coffee preparation.
6. Wait until at least 20ml of coffee have been delivered into the cup.
7. Measure the coffee flow temperature at about 2÷10mm from the coffee spout, as shown in the below picture:

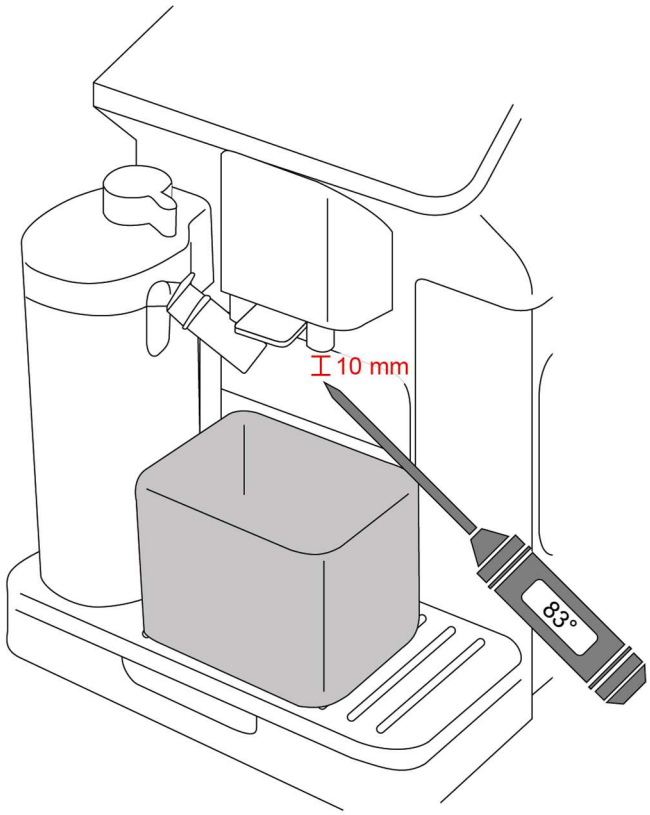

The **optimal indicative temperature measurement** for coffee should be **83°C±3°C**.

7.4 FROTHED HOT MILK CONSISTENCY AND TEMPERATURE TEST

A frothed hot milk consistency and temperature test can be required whenever the Serviceman is getting complaints from the end user about the quality or the temperature of the hot milk beverages.

To perform the frothed hot milk consistency and temperature test, follow in sequence the below steps:

1. Turn the appliance ON.
2. Fill the milk jug with 200ml of **semi-skimmed** milk at a temperature of 5°C±2°C.
3. Insert the lid to the jug and connect it to the appliance.
4. Set the maximum level of froth by rotating the frothing adjustment knob on the jug lid accordingly.
5. Place a 250ml PIREX graduated container under the milk spout.
6. Select the HOT MILK beverage and wait until at least 80ml of frothed milk have been delivered into the container.
7. Measure the milk flow temperature during the delivery at about 2÷10mm from the spout, as shown in the below picture:

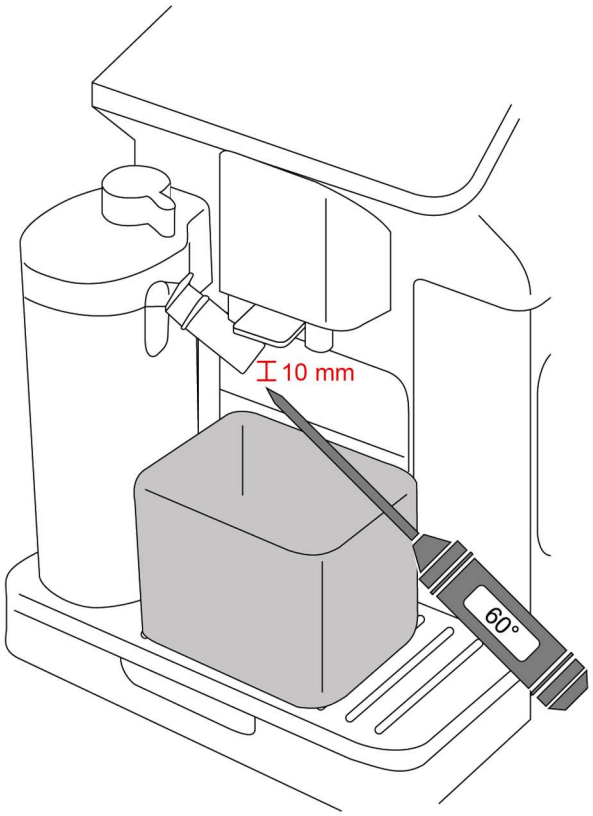

The **optimal conditions for the frothed milk** (without coffee) should be as resumed below:

- **Froth appearance: small bubbles without splashes.**
- **Milk temperature: 60°C±5°C.**
- **Froth amount: 50% milk and 50% froth.**

7.5 COLD BREW EVALUETION

On the COLD BREW ORIGINAL beverage, the preparation time (from when the machine starts grinding to when it returns in ready to use) must be less than 5 minutes, with the grinder set to position 5. If the preparation time is more than 5 minutes, widen the grinder position (to 6-7) and test again. The beverage must have ambient temperature.

7.6 FROTHED COLD MILK CONSISTENCY AND TEMPERATURE TEST

A frothed cold milk consistency and temperature test can be required whenever the Serviceman is getting complaints from the end user about the quality or the temperature of the cold milk beverages.

To perform the frothed cold milk consistency and temperature test, follow in sequence the below steps:

1. Turn the appliance ON.
2. Fill the milk jug with 200ml of **skimmed** milk at a temperature of 5°C±2°C.
3. Insert the lid to the jug and connect it to the appliance.
4. Set the maximum level of froth by rotating the frothing adjustment knob on the jug lid accordingly.
5. Place a 250ml PIREX graduated container under the milk spout.
6. Select the COLD MILK beverage and wait until at least 80ml of frothed milk have been delivered into the container.
7. Measure the milk flow temperature during the delivery at about 2÷10mm from the spout, as shown in the below picture:

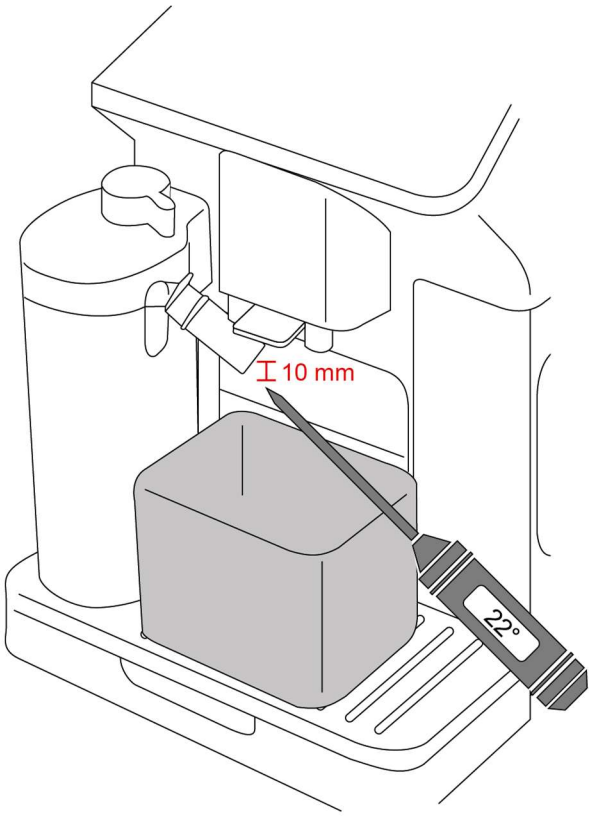

The **optimal conditions for the frothed milk** (without coffee) should be as resumed below:

- **Froth appearance: small bubbles without splashes.**
- **Milk temperature: 22,5°C±2,5°C.**
- **Froth amount: 50% milk and 50% froth.**

8 DEMO MODE ACTIVATION

The below procedure explains how to start the continuous displaying of the demonstration video on the Eletta Explore screen, for instance in case the appliance would be exhibited on the shelf of a shop.

1. The appliance must be plugged-in and in stand-by mode.
2. Remove the drip tray.
3. When the request to insert the drip tray prompts on the display, touch first the bottom-left corner and then the top right corner of the touch screen:

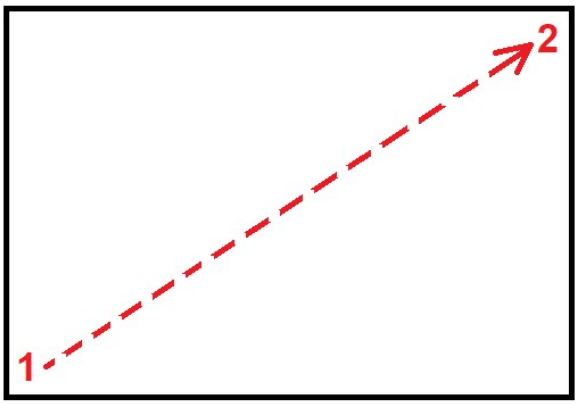

Insert the drip tray. The demonstration video (DEMO MODE) will start being displayed continuously on the screen until the appliance will be powered OFF.